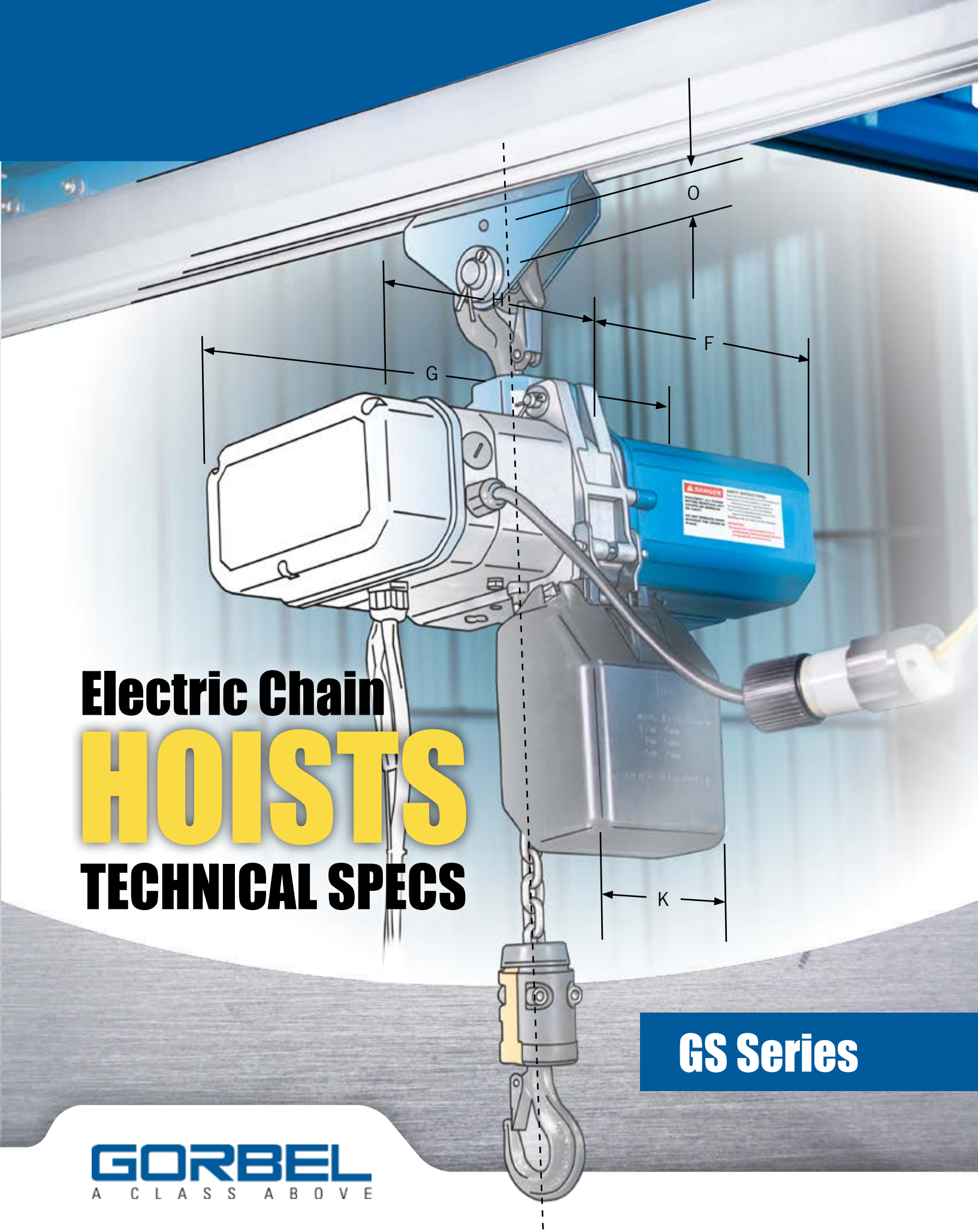

Electric Chain HOISTS TECHNICAL SPECS

GS Series

GORBEL
A CLASS ABOVE

Specs By Speed - Single Speed

Single Speed									
Gorbel Model Number	Capacity	Falls (Reeves)	Lift Speed ft/min	Voltage	Motor HP	Full Load Amps	Body Size	HST Duty Rating	Headroom*
94531	1/8	1	26**	115V	0.87	11	03	H4	14.5
94533	1/4	1	23**	115V	0.87	11	03	H4	14.5
94535	1/2	1	16**	115V	0.87	11	03	H4	14.5
	1	2	8**						
94820	1/8	1	16	230V	0.40	2.16	03	H4	14.5
	1/4	2	8						16.25
94822	1/4	1	16	230V	0.87	2.16	03	H4	14.5
	1/2	2	8						16.25
94804	1/2	1	16	230V	0.6	2.2	03	H4	14.5
	1	2	8						16.25
94806	1	1	16	230V	1.22	1.9	07	H4	17.06
	2	2	8						21.06
94520	1/8	1	16	460V	0.59	1.1	03	H4	14.5
	1/4	2	8						16.25
94522	1/4	1	16	460V	0.87	1.1	03	H4	14.5
	1/2	2	8						16.25
94504	1/2	1	16	460V	0.6	1.1	03	H4	14.5
	1	2	8						16.25
94506	1	1	16	460V	1.22	1.9	07	H4	17.06
	2	2	8						21.06

* Dimensions shown are with the Single Hole Suspension Plate and do not include the chain bag.
**Load Dependent Speed- speed is shown at capacity but can travel faster at lighter loads

Specs By Speed - Dual Speed

Dual Speed									
Gorbel Model Number	Capacity	Falls (Reeves)	Lift Speed ft/min	Voltage	Motor HP	Full Load Amps	Body Size	HST Duty Rating	Headroom*
94872	1/8	1	32, 8	230V	0.52	2.68	03	H4	14.50
	1/4	2	16, 4						16.25
94873	1/4	1	32, 8	230V	0.64	2.35	03	H4	14.50
	1/2	2	16, 4						16.25
94852	1/2	1	32, 8	230V	1.50	4.20	07	H4	17.06
	1	2	16, 4						21.06
94856	1	1	24, 6	230V	1.77	5.20	07	H4	17.06
	2	2	12, 3						21.06
94861	1	1	32, 8	230V	2.94	9.30	09	H4	21.56
	2	2	16, 4						25.19
94874	1 1/2	1	24, 6	230V	4.89	15.00	09	H4	21.56
	3	2	12, 3						25.19
94864	2	1	32, 8	230V	4.89	7.10	11	H4	24.06
	4	2	16, 4						29.13
94865	2 1/2	1	40, 10	230V	7.07	27.80	11	H4	24.06
	5	2	20, 5						29.13
94572	1/8	1	32, 8	460V	0.52	1.28	03	H4	14.50
	1/4	2	16, 4						16.25
94573	1/4	1	32, 8	460V	0.64	1.68	03	H4	14.50
	1/2	2	16, 4						16.25
94552	1/2	1	32, 8	460V	1.50	2.00	07	H4	17.06
	1	2	16, 4						21.06
94556	1	1	24, 6	460V	1.77	3.70	07	H4	17.06
	2	2	12, 3						21.06
94557	1	1	32, 8	460V	2.94	5.40	09	H4	21.56
	2	2	16, 4						25.19
94574	1 1/2	1	24, 6	460V	4.89	7.15	09	H4	21.56
	3	2	12, 3						25.19
94564	2	1	32, 8	460V	4.89	7.10	11	H4	24.06
	4	2	16, 4						29.13
94565	2 1/2	1	40, 10	460V	7.07	16.00	11	H4	24.06
	5	2	20, 5						29.13

* Dimensions shown are with the Single Hole Suspension Plate and do not include the chain bag.

Specs By Speed - Dual Speed (North American Certification Available)

Dual Speed - North American Certification Available									
Gorbel Model Number	Capacity	Falls (Reeves)	Lift Speed ft/min	Voltage	Motor HP	Full Load Amps	Body Size	HST Duty Rating	Headroom*
94880	1/8	1	32, 8	230V	0.51	2.68	03	H4	14.50
	1/4	2	16, 4						16.25
94882	1/4	1	32, 8	230V	0.64	2.35	03	H4	14.50
	1/2	2	16, 4						16.25
94875	1/2	1	48, 12	230V	1.77	6.20	07	H4	17.06
	1	2	24, 6						21.06
94881	1	1	32, 8	230V	2.94	9.30	09	H4	21.56
	2	2	16, 4						25.19
94876	1	1	24, 6	230V	1.77	5.20	07	H4	17.06
	2	2	12, 3						21.06
94884	1 1/2	1	24, 6	230V	4.89	15.00	09	H4	21.56
	3	2	12, 3						25.19
94885	2 1/2	1	40, 10	230V	7.07	27.80	11	H4	24.06
	5	2	20, 5						29.13
94553	1/2	1	32, 8	460V	1.50	2.00	07	H4	17.06
	1	2	16, 4						21.06
94558	1	1	32, 8	460V	2.94	5.40	09	H4	21.56
	2	2	16, 4						25.19
94554	1/2	1	32, 8	575V	1.5	2.2	07	H4	17.06
	1	2	16, 4						21.06
94559	1	1	32, 8	575V	2.94	3.7	09	H4	21.56
	2	2	16, 4						25.19
94566	2 1/2	1	40, 10	575V	7.07	8.80	11	H4	24.06
	5	2	20, 5						29.13

* Dimensions shown are with the Single Hole Suspension Plate and do not include the chain bag.

Motorized and Manual Trolley

Gorbel P/N	Trolley Width	Capacity (lbs)	Min. Beam Width (in)	Max. Beam Width (in)	Assembled Trolley P/N	Compatible Hoist Bodies	Speed ft/min
Motorized Single Speed 460-3-60	S	1000	1.97	4.17	95100	03	63
		4000	2.60	5.31	95102	07	63
		4000	2.60	5.31	95102-030	030/54	63
		7000	3.23	6.10	95104	09	31
	S1	1000	4.33	7.87	95110	03	63
		4000	5.39	8.46	95112	07	63
		4000	5.39	8.46	95112-030	030/54	63
		7000	5.39	8.46	95114	09	31
	S2	1000	8.24	11.81	95120	03	63
		4000	8.66	11.81	95122	07	63
		4000	8.66	11.81	95122-030	030/54	63
		7000	8.66	11.81	95124	09	31
Motorized Two Speed 460-3-60	S	1000	1.97	4.17	95130	03	31
		4000	2.60	5.31	95132	07	19,78
		4000	2.60	5.31	95132-030	030/54	19,78
		7000	3.23	6.10	95134	09	19,78
		12000	3.23	6.10	95136	11	16,63
	S1	1000	4.33	7.87	95140	03	19,78
		4000	5.39	8.46	95142	07	19,78
		4000	5.39	8.46	95142-030	030/54	19,78
		7000	5.39	8.46	95144	09	19,78
		12000	6.30	8.90	95146	11	16,63
	S2	1000	8.24	11.81	95150	03	31
		4000	8.66	11.81	95152	07	19,78
		4000	8.66	11.81	95152-030	030/54	19,78
		7000	8.66	11.81	95154	09	19,78
		12000	9.06	12.20	95156	11	16,63
Manual Push	S	1000	1.97	4.17	95160	03	NA
		4000	2.60	5.31	95162	07	NA
		4000	2.60	5.31	95162-030	030/54	NA
		7000	3.23	6.10	95164	11	NA
	S1	1000	4.33	7.87	95170	03	NA
		4000	5.39	8.46	95172	07	NA
		4000	5.39	8.46	95172-030	030/54	NA
		7000	5.39	8.46	95174	09	NA
	S2	1000	8.24	11.81	95180	03	NA
		4000	8.66	11.81	95182	07	NA
		4000	8.66	11.81	95182-030	030/54	NA
		7000	8.66	11.81	95184	09	NA
Manual, Geared	S	12000	3.23	6.10	95200	11	NA
	S1	12000	6.30	8.90	95210	11	NA
	S2	12000	9.06	12.20	95230	11	NA

Dimensions and Suspensions

Dimensions (inches)	Hoist Size / # of Falls (Reeves)							
	03		05/07		09		11	
	1	2	1	2	1	2	1	2
A Single Hole Plate	14.50	16.25	17.06	21.06	21.00	25.19	24.06*	29.13
A Rigid Upper Hook	17.31	19.13	19.69	23.69	24.25	28.44	28.81	33.88
A TROLLEY (Double hole suspension)	16.13	17.88	18.13	22.06	21.56	25.81	26.69	31.75
B	0.69	0.69	0.94	0.94	1.31	1.31	1.75	1.75
C	5.88	6.75	6.56	7.88	10.44	10.44	9.19	11.06
D	4.94	4.06	6.38	5.06	7.25	7.25	8.88	7.06
E	1.44	1.44	1.88	1.88	2.31	2.31	2.63	2.63
F	8.69	8.69	10.81	10.81	14.13	14.13	14.44	14.44
G	16.25	16.25	19.94	19.94	25.25	25.25	25.88	25.88
H	7.56	7.56	9.13	9.13	11.13	11.13	11.44	11.44
I	0.50	0.50	0.50	0.50	0.69	0.69	0.88	0.88
J	1.00	0.88	0.88	1.13	1.25	1.50	1.50	1.75
K	6.31	6.31	6.31	6.31	10.25	10.25	10.25	10.25
L	0.75	0.88	0.88	1.13	1.13	1.25	1.19	1.63
M	0.69	0.94	0.94	1.25	1.25	1.56	1.56	2.31
N	0.88	0.88	1.13	1.13	1.19	1.19	1.63	1.63
O	0.94	0.94	1.25	1.25	1.56	1.56	2.31	2.31
P	0.88	0.88	1.13	1.13	1.50	1.50	1.75	1.75
Q	3.69	3.69	3.69	3.69	4.69	4.69	5.50	5.50
R (Max)	17.33	17.33	17.35	17.35	21.03	21.03	22.10	22.10
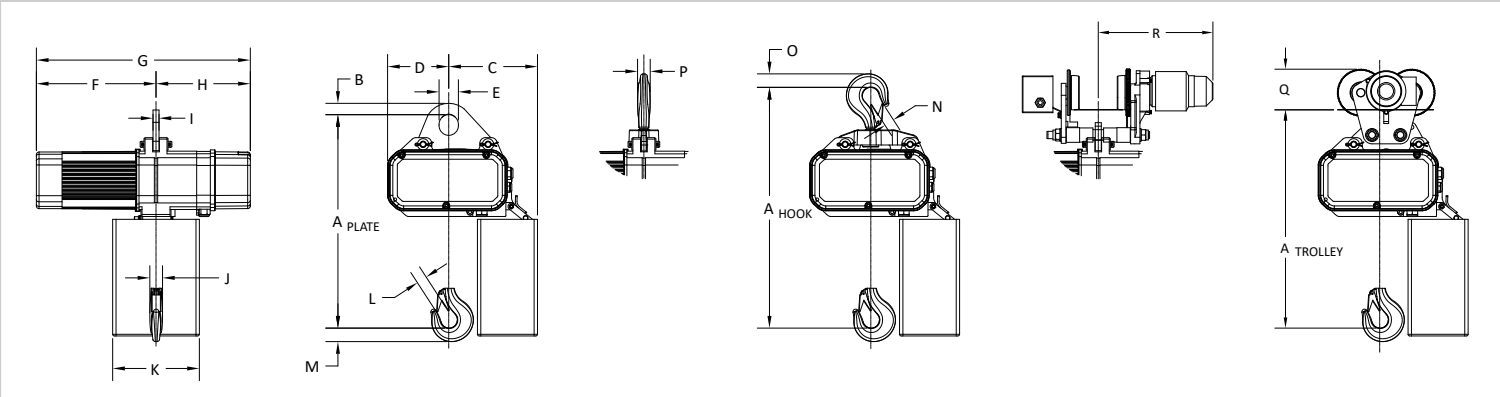
*** When used with Single Hole Suspension Plate p/n 94644, hoist p/n 94564 has an "A" dimension of 24.81 inches and a maximum capacity of 2 tons (for use with WSC Loadbar Trolley).**