GORBEL®
A CLASS ABOVE

GSS 115 VAC Electric Chain Hoist

Installation, Operation & Maintenance Manual

Part Number: MAN-US093 R02 Released 9/2026
Find manual updates at:
https://www.gorbel.com/service-support/archived-installation-manuals

Scan to Register
Your Warranty

Rated Loads
1/8, 1/4, 1/2 and 1 Ton

Follow all instructions and warnings for installing, operating, inspecting and maintaining this electric chain hoist.

Gorbel Customer Order No. / Serial No. _____

Gorbel Dealer _____

www.gorbel.com | 1-800-821-0086 | info@gorbel.com

This page intentionally left blank.

Questions? Concerns? Comments?

Please call (800) 821-0086 (US and Canada)

Table of Contents

Section 1 - Safety and Hoist Overview 1-1

Hoist Safe Operating Practices 1-2
Safe Operating Tag 1-3
Electrical Design Standards 1-3

Section 2 - GSS Hoist Technical Information 2-1

New Hoist Components Overview 2-1
Technical Information 2-6

Section 3 - Delivery, Transportation and Storage 3-1

Delivery 3-1
Transport 3-1
Storage Conditions 3-1

Section 4 - Installation 4-1

Installer Qualifications 4-1
General 4-1
Unpacking the Hoist 4-2
Inspection Before Assembly 4-3
Assembly 4-4

Section 5 - Operation 5-1

Hoist Operator Qualifications 5-1
Hoist Inspection Before Starting Work 5-2

Section 6 - Maintenance 6-1

Load and Suspension Hooks 6-2
Load Chain, Chain Guide and Hold Down 6-3

Section 7 - Troubleshooting 7-1

Control Boards 7-1
Troubleshooting Table 7-5

Limited Warranty 8-1

This page intentionally left blank.

Section 1 - Safety and Hoist Overview

Warnings and Important Information

Introduction

This manual contains important information for installation, operation and maintenance of your Gorbel® hoist. It is strongly recommended that you read and understand this manual prior to installing, operating or maintaining your hoist.

Safety Symbol Conventions

The following signal words and symbols are used in this manual to highlight hazardous situations.

CAUTION!
Caution indicates a potentially hazardous situation, which may result in minor or moderate injury or property damage.

WARNING!
Warning indicates a hazardous situation, which could result in serious injury or death and property damage.

HAZARD!
Hazard indicates a hazardous situation, which could result in serious injury or death and property damage.

ELECTRICAL SHOCK HAZARD!
Electrical Shock Hazard indicates a hazardous situation, which could result in serious injury or death and property damage.

HEAT HAZARD!
Heat Hazard indicates a hazardous situation, which could result in serious injury or death and property damage.

Hoist Safe Operating Practices

General

WARNING!

Read all instructions before installing or operating the hoist. Forward this manual to the hoist operator. Failure to operate the hoist as directed in the manual may cause injury.

Safe Operating Practices are the most important factor for minimizing the possibility of personal injury to the operator and those working in the area, or damage to property, equipment, or material.

No operator should be permitted to use the equipment who is not familiar with its operation, is not physically or mentally fit, or has not been schooled in Safe Operating Practices. The misuse of hoists can lead to hazards which cannot be protected against by mechanical means. These hazards can only be avoided by the exercise of Safe Operating Practices, care, and common sense.

Safe Operating Practices also involve a program of periodic inspection and preventive maintenance covered in Section 6 of this manual. Part of an operator's training should be an awareness of potential malfunctions/hazards requiring adjustments or repairs, and bringing these to the attention of a supervisor for corrective action.

Supervisors and managers also have an important role to play in any safety program by ensuring that a maintenance schedule is adhered to, and that the equipment provided for operators is suitable for the job intended without violation of one or more of the rules covering Safe Operating Practices and good common sense.

The Safe Operating Practices shown are taken in part from the following publications:

- American National Standard Institute (ANSI)
- Safety Standards for Cranes, Derricks, Hoists
- ANSI B30.2 - Overhead and Gantry Cranes
- ANSI B30.16 - Overhead Hoists

Do's and Don'ts for Safe Operation of Hoists

The following are Do's and Don'ts for safe operation of overhead hoists. These rules can make an operator aware of dangerous practices to avoid and precautions to take for their own safety and the safety of others. Frequent examinations and periodic inspections of the equipment as well as observance of safety rules may save lives, time and money.

DON'TS - HOISTS

1. Do not allow any unqualified personnel to operate hoist.
2. Never lift or transport a load until all personnel are clear.
3. Do not transport a load over personnel.
4. Never pick up a load beyond the rated capacity appearing on the hoist. Overloading can also be caused by jerking the load, and by static overload.
5. Never carry personnel on the hook or the load.
6. Do not operate hoist if you are not physically fit.
7. Do not operate hoist to extreme limits of cable travel without first checking for proper limit switch action.
8. Avoid impact between two hoists or between hoist and end stop.
9. Do not tamper with or adjust any parts of the hoist unless authorized to do so.
10. Never use the load cable as a sling.
11. Do not divert attention from the load while operating the hoist.
12. Never leave a suspended load unattended.
13. Do not use limit switch(es) for normal operating stop(s). These are safety devices only and should be checked on a regular basis for proper operation.
14. Never operate a hoist that has an apparent or suspected mechanical or electrical defect.
15. Do not use load cable as a ground for welding. Never touch a live welding electrode to the load cable.
16. Do not jog controls unnecessarily. Hoists generally use high torque, high slip motors. Each sudden start causes a spike in current greater than the running current which can lead to overheating and burnout if continued to excess.
17. Do not operate the hoist if the load is not centered under the hoist.
18. Do not operate the hoist if the wire rope is twisted, kinked, or damaged.
19. Do not remove or obscure hoist labels.
20. Do not permanently activate or bypass the Operator Present Sensor.
21. Do not disassemble or reassemble components while the hoist is energized. Never "Hot-Swap" components.

DO'S - HOISTS

1. Read and follow manufacturer's instructions and installation and maintenance manuals.
2. When repairing or maintaining a hoist, use only manufacturer's recommended parts and materials.
3. Read and follow all instruction and warning information on or attached to a hoist.
4. Remove the hoist from service and thoroughly inspect and repair it if unusual performance or visual defects such as peculiar noises, jerky operations, travel in improper direction, or obviously damaged parts are noticed.
5. Follow the regular schedule of inspection in Section 6 of this manual, and maintain records for all hoists with special attention given to hooks, load cables, brakes, and limit switches.
6. Check operation of brakes for excessive drift.
7. Check for damaged hooks and load cable.

DO'S - HOISTS, CONTINUED

8. Keep load cable clean and well maintained.
9. Check the load cable for improper seating, twisting, kinking, wear, or other defects before operating the hoist.
10. Make sure a load clears neighboring machinery, or other obstructions when raising, lowering, or transiting the load.
11. Center hoist over the load before operating.
12. Avoid swinging of load or load hook when transiting the hoist and load.
13. Be sure the load attachment is properly seated in the saddle of the hook. Balance the load correctly before lifting. Avoid hook tip loading.
14. Pull in a straight line, so that neither hoist body nor load cable are angled around an object.
15. Take up slack slowly.
16. Know the hand signals for hoisting, cross travel, and crane travel if working with cab-operated hoists or cranes. Operators should accept signals of only those persons authorized to give them.

Safe Operating Tag

The safe operating tag shown in **Diagram 1-1** is supplied with the electric chain hoist.

If the tag is not attached to the control pendant cable of the hoist, order a replacement tag from GForbel through the dealer and install it on the control pendant of the hoist. The tag is provided in English on one side for US customers, and in Spanish on the other side for customers in Mexico.

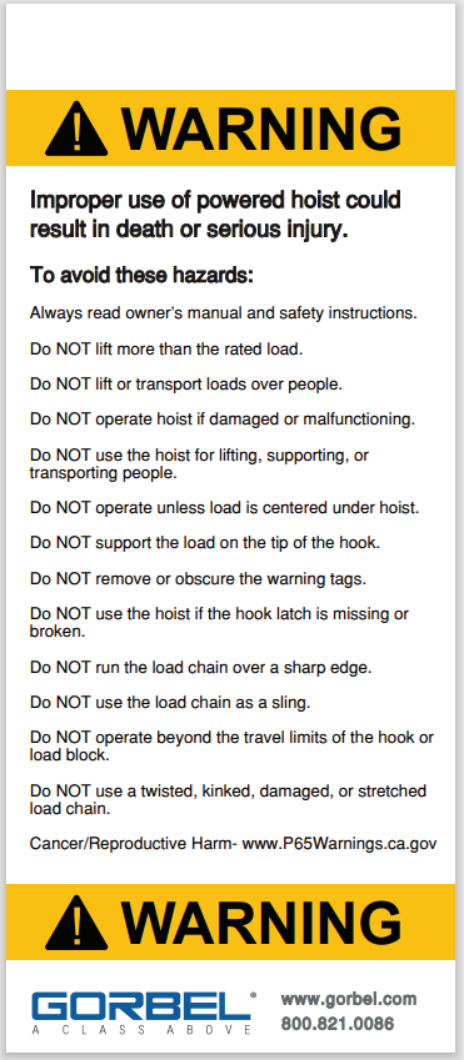

Diagram 1-1. Safe Operating Tag.

Electrical Design Standards

NOTICE: Each Gorbel® Electric Chain Hoist is built in accordance with the specifications contained herein and at the time of manufacture complied with our interpretation of applicable sections of the American Society of Mechanical Engineers Code B30.16 "Overhead Hoists", the National Electrical Code (ANSI/NFPA 70) and the Occupational Safety and Health Act.

Since OSHA states the National Electrical Code applies to all electric hoists, installers are required to provide current overload protection and grounding (on the branch circuit section) in keeping with the code. Check each installation for compliance with the application, operation and maintenance sections of these articles.

This page intentionally left blank.

Section 2 - GSS Hoist Technical Information

ELECTRICAL SHOCK HAZARD!

Hazardous voltages are present in the electric chain hoist and in connections between components. **Contact with connected electrical circuits may cause death or serious injury.**

Before removing covers, switch off and de-energize the supply of electricity to the equipment. Lockout and tag the supply device in the 'OFF' position.

To allow time for high voltage capacitance to dissipate, **wait at least 10 minutes before opening the device.**

New Hoist Components Overview

GSS 115 VAC Hoist was designed to respond to demand for a hoist that has the strength delivered by a 3-phase motor with the wide applicability of single-phase 115 VAC input voltage.

The overall design of the GSS Hoist is mechanically very similar to the GS hoists that came before it, but the electronics are all new. Part of the redesign is an inverter that converts input single-phase voltage to 3-phase that is routed to the Lift Motor. The version of the hoist that Gorbel will deliver is configured for single-phase 115 VAC input, only. The following are standard components which are the same as GS Hoist versions:

• Hoist Body	• Brake (mechanically similar, 103 VDC on the GSS vs. 203 DC on the GS)
• Motor (Size 63)	• Upper Hook Suspension
• Clutch	• Suspension Plates
• Chain Bag	• Push Trolley (no electric at this time)
• All bolts and fasteners	• Pendant (Conductix with Up/Down and E-Stop)

Refer to **Diagram 2-2**, which shows the hoist with the covers off revealing the various major components of the hoist. Both the Brake Side Cap and the Control Cap are aluminum for enhanced heat dissipation.

There are two control boards for the functions of the GSS Electric Hoist, and they are housed at opposite ends of the hoist. The Motor Side Control Board (6) is the main PCB for the hoist, and it controls several functions. The Control Board is designed as a matched pair with the Lift Motor (4). No substitutions for either of these components is supported.

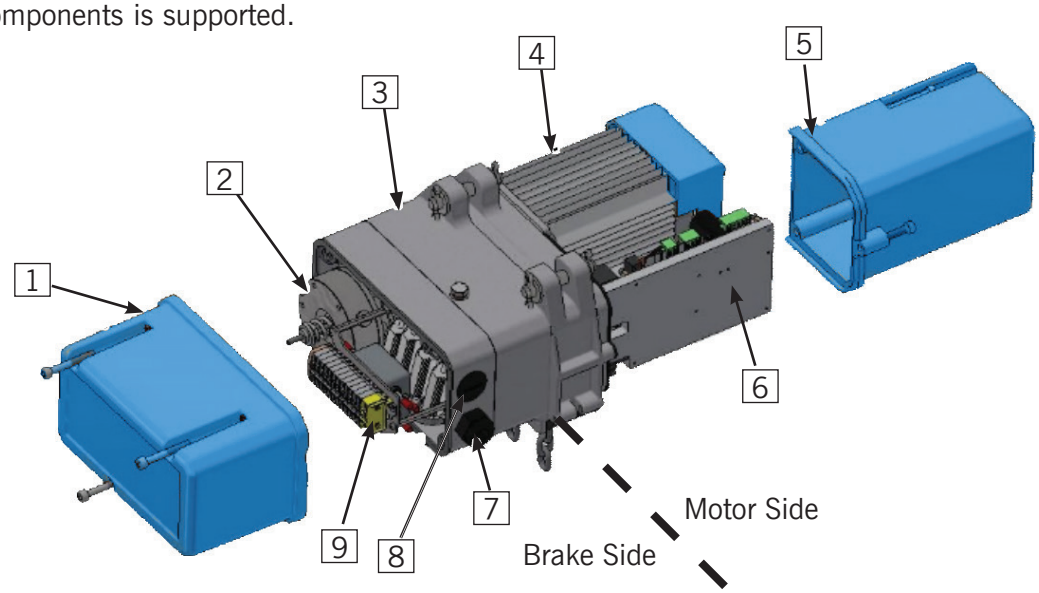

1. Brake Side Cap
2. Brake
3. Gear Housing
4. Motor
5. Control Cap
6. Motor Side Control Board (Main PCB)
7. Power Supply Cable Seal
8. Control Cable Seal
9. Brake Side Control Board

Diagram 2-2: GSS Chain Hoist Major Components.

New Hoist Components Overview, continued

Main Control Board

Refer to **Diagram 2-3**. The Control Board is a replaceable unit. No components of the board are individually replaceable. The Control Board is mounted on a thick aluminum plate that acts as a heat sink for the board.

The Control Board houses the:

- Rectifier circuit that converts the input single-phase voltage to 3-phase. The two large capacitors (1) are part of this rectifier circuit.
- Motor Plug Jack (2)
- Brake Signal Plug Jack (3)
- Non-Replaceable Fuse (4) for Motor Power.
- Emergency Stop Relays (5)
- Power Supply for Control Voltage (6)
- Emergency Stop Relay (7)
- Brake Relay (8)
- 2 Limit Switches (9).
- Thermal Protection Plug Jack (10)
- Jack for Hoist Control (Up/Down/Emergency Stop and Power Supply Voltage) (11)

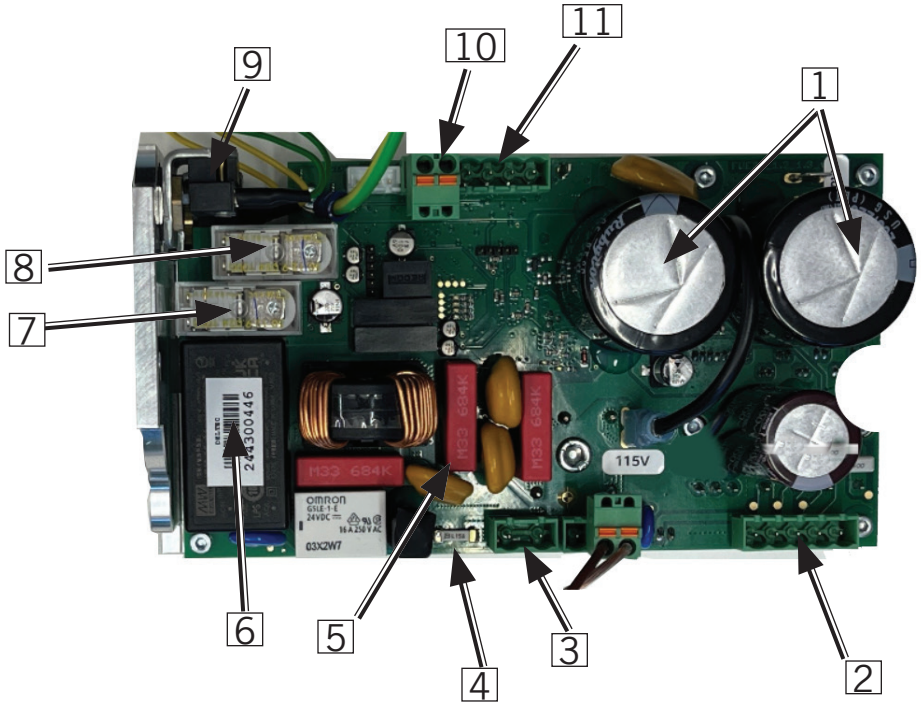

Diagram 2-3: Main Control Board.

NOTE: While there is a fuse on the PCB, it is not replaceable at this time. If an over-current condition blows this fuse, the entire PCB must be replaced. The fuse will be changed to a replaceable one in the next release of the Main Control Board. The replaceable fuse rating is yet to be determined, but will be 20 or 25 amps.

New Hoist Components Overview, continued

Main Control Board LEDs

There are a series of LEDs on the Main Control Board that will indicate when all is working correctly on the board and related components.

Refer to **Diagram 2-4**, which shows the location of the 15V and 5 V LEDs and LEDs 1-4. There are various patterns of lit and not lit conditions for these LEDs that are covered for troubleshooting in **Section 7, LEDs for Troubleshooting**.

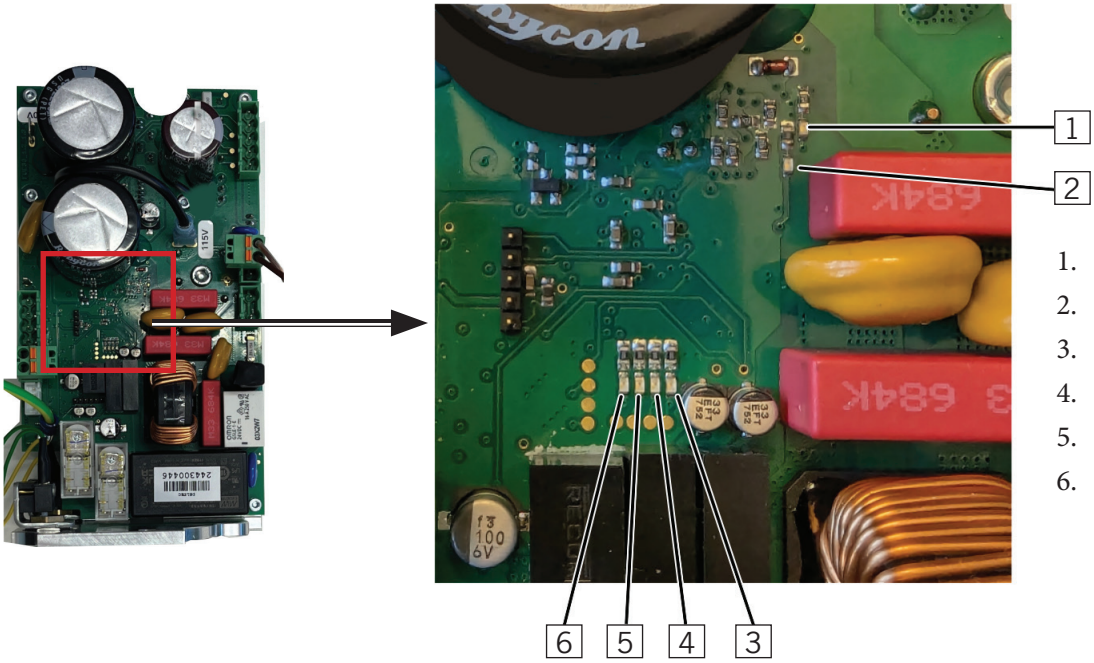

1. LED 15 V
2. LED 5 V
3. LED 1
4. LED 2
5. LED 3
6. LED 4

Diagram 2-4: Main Control Board LEDs.

Brake Side Control Board

HEAT HAZARD!

There is sufficient heat generated by the Brake Resistors to cause burns.

Be sure to wait for 10 minutes after power down before opening the Brake Side compartment.

Refer to **Diagram 2-5**. The Brake Side Control Board is also a replaceable unit. No components of the board are individually replaceable.

Continued on the next page...

New Hoist Components Overview, continued

Brake Side Control Board, continued

The Brake Side Control Board contains:

- A series of Brake Resistors. These dissipate electrical energy generated when braking when lowering the load.
- Terminal (2) which interfaces the Power Supply Cable and the Control Cable.
- The EMC Filter (3) protects the hoist from electromagnetic noise from other devices, and protects other devices from emissions from the hoist. It also filters the voltage that is delivered to the motor side of the hoist.
- The Brake Resistors are mounted to an aluminum Mounting Plate (4) that also acts as a heat sink for the resistors.

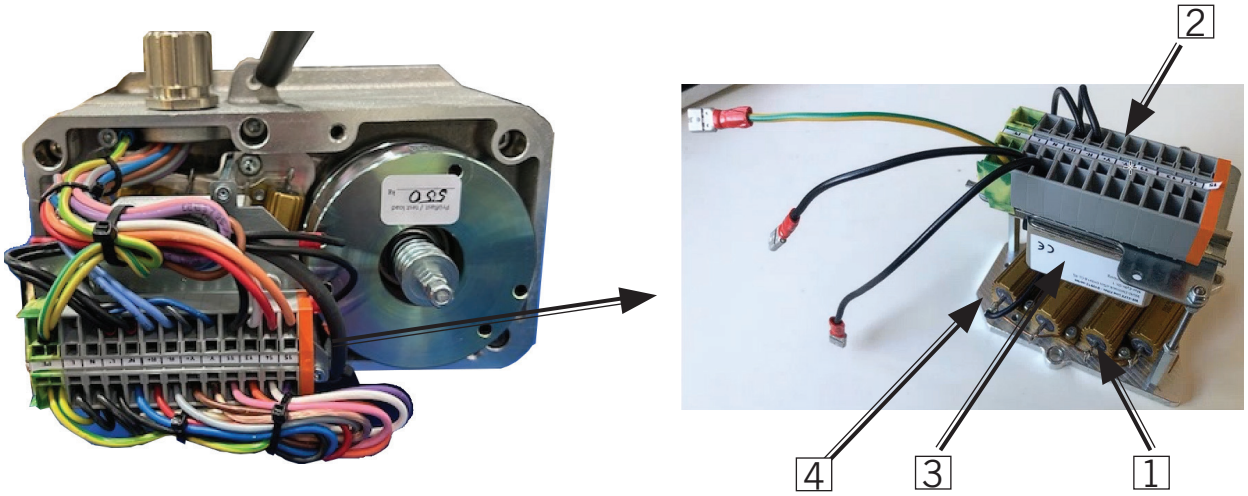

Diagram 2-5: Brake Side Control Board.

Interface Cable

Refer to **Diagram 2-6**. The Interface Cable connects the Motor Side Control Board to the Brake Side Control Board through the hoist body. The green plugs on the end plug into jacks on the Motor Side Control Board, and the wires on the opposite end interface through the Terminal.

Diagram 2-6: Interface Cable.

New Hoist Components Overview, continued

Pendant

Refer to **Diagram 2-7**. The Conductix Pendant for the GSS Hoist is the same as those used for the GS Hoists, but is shown here because there are multiple options from our supplier. This is the pendant that will be available on the GSS hoist.

Diagram 2-7. Conductix Pendant.

Load Dependent Lifting Speed

A single fall GSS Hoist has a capacity of 1000 pounds (500 kg) with a maximum at capacity lifting speed of 16.6 ft/min (5 m/min). The actual speed of the lift is dependent on the weight being lifted. An unloaded hook can travel at 36 feet per minute (11m/min). A reeved two-fall GSS at its 2000 lb maximum capacity will achieve just over 8 ft/min (2.5 m/min).

The hoist will sense the weight of any load, and the speed of the hoist will change to it maximum for that weight. Design intent is for the weight to be calculated on the lift, so that the same speed is achieved when lifting and lowering.

NOTE: In an operation in which a load is lifted and unloaded, the hook will be much lighter when lowering than it was when lifting. The hoist will therefore be conditioned for to a slower speed. To achieve maximum lowering speed, the unloaded hook should be momentarily lifted to change the speed for lowering to maximum.

Input Voltage Tolerance

The GSS 115 VAC Hoist input voltage specification is 115 VAC +/- 5%.

Brake

Other than the power differences previously described, the GSS 115 VAC Hoist brake is the same as GS versions. When the hoist is not lifting or lowering, the brake is on. This will ensure that there is no slippage when the load is idle. Even if the clutch is worn, the brake will hold the load.

Technical Information

Hoist Components

Diagram 2-8 and 2-9 below illustrate the components of the GSS 115 VAC Hoist.

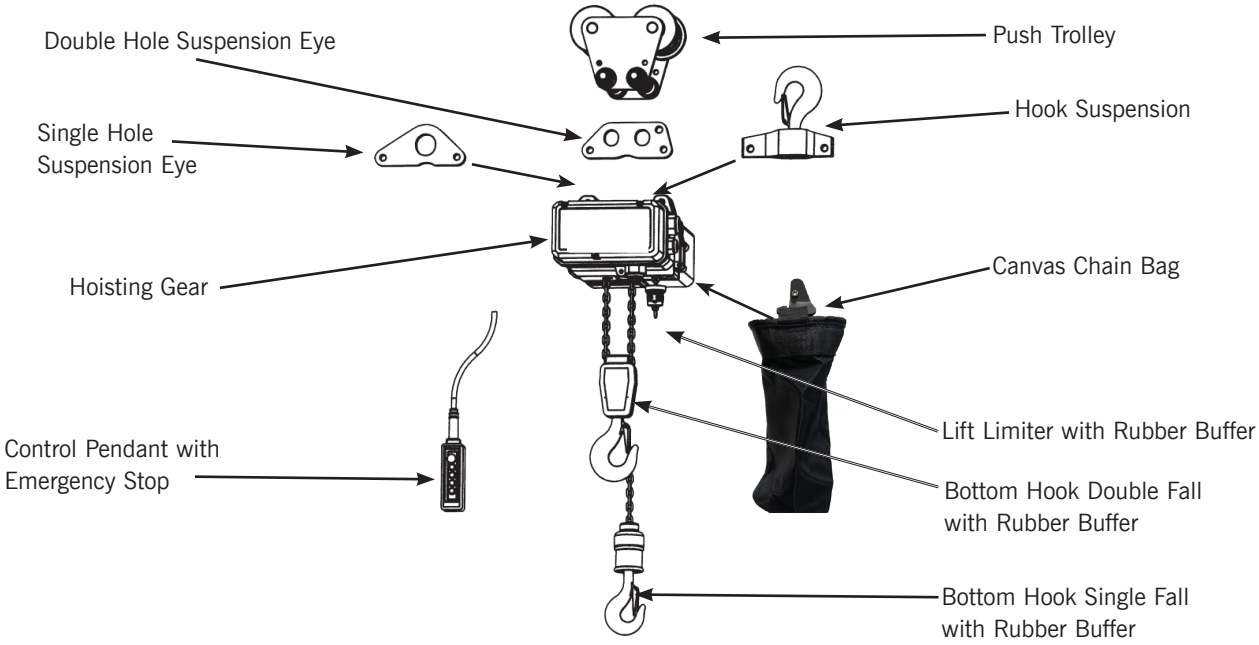

Diagram 2-8. Hoist Components, Part 1.

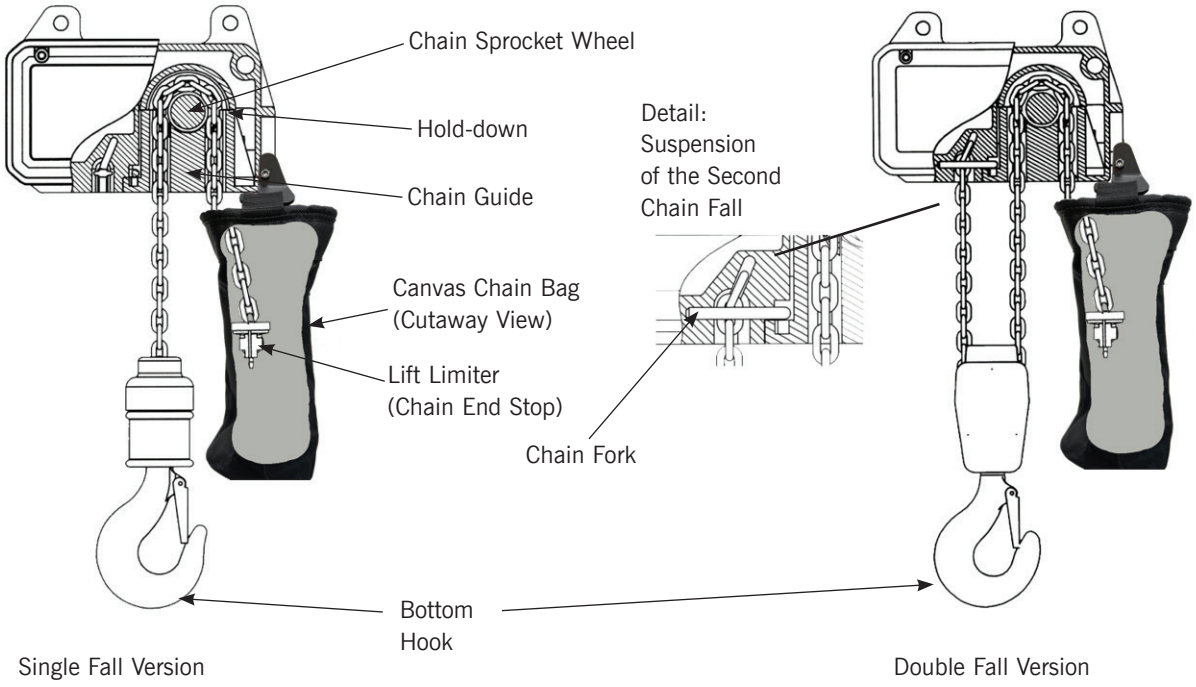

Diagram 2-9. Hoist Components, Part 2.

Technical Information, Continued

Optional Flip Bag for Longer Chains

Refer to **Diagram 2-10.** The GSS Hoist can be equipped with a Flip Bag for longer chains. Install the Flip Bag Bracket as shown in the diagram. Note that the top end of the bracket must be secured with the Suspension Bolt. The installed Chain Bag is as shown in **Diagram 2-11**.

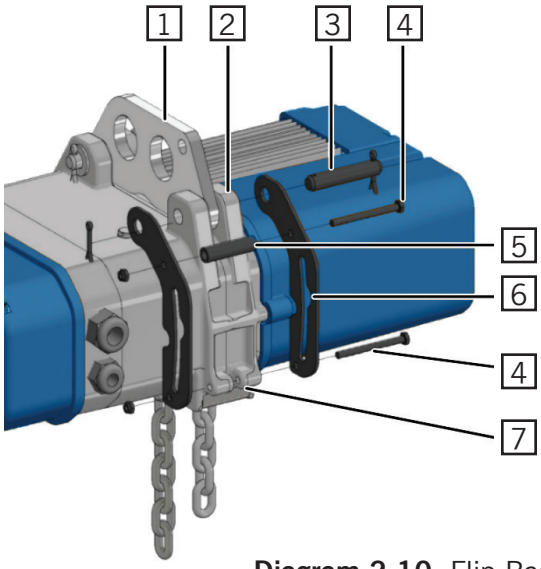

1. Suspension Plate
2. Housing suspension point
3. Suspension bolt with split pins
4. Screws and securing nuts (2 each)
5. Spacer sleeve(s)
6. Retaining plates
7. Chain Bag suspension point

Diagram 2-10. Flip Bag Bracket.

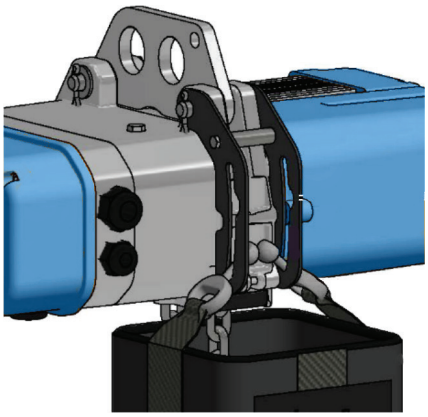

Diagram 2-11. Flip Bag Installed.

Technical Information, Continued

Hoist Type Plate

Diagram 2-12 and **2-13** below illustrate the Punched Fabrication Number and Type Plate.

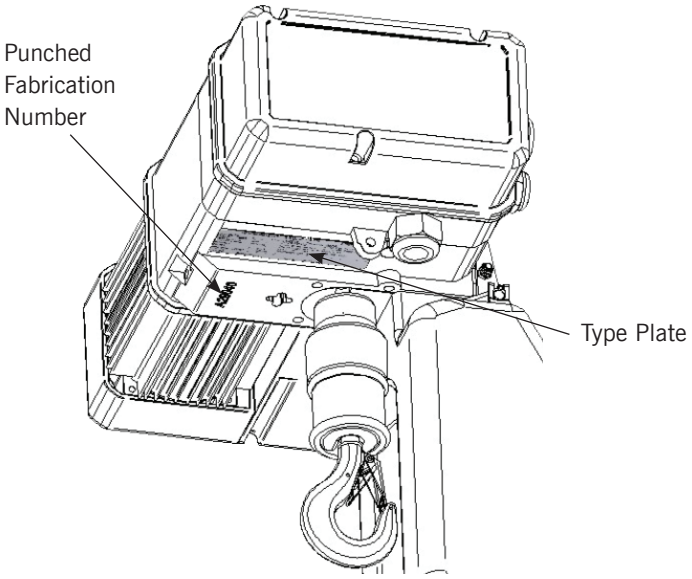

Diagram 2-12. Chain Hoist Punched Fabrication Number.

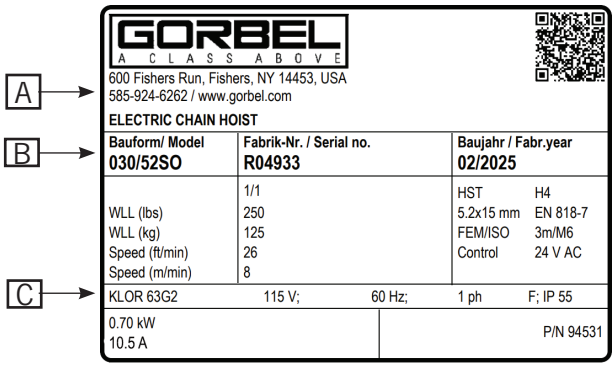

Diagram 2-13. Example Type Plate.

Plate Item	Description
A	Manufacturer's address; machine type
B	Type; fabrication number; year of fabrication
C	Technical and electrical data

Table 2-1: Description of the Type Plate.

Operating Conditions

- Temperature range -4°F to +104°F (-20°C to +40°C)
- Humidity 85% or less
- Operating height up to 3300 ft (1000 m) above sea level
- Insulation class F
- Protection class IP55
- Duty cycle rating H4

CAUTION!

If your operating conditions fall outside of the ranges listed here, please contact Gorbel to ensure your hoist can be used without causing damage to the hoist or creating an unsafe situation for the hoist operator.

Technical Information, Continued

Hoist Dimensions

Diagram 2-14 below illustrates the dimensions of the GSS 115 VAC Hoist.

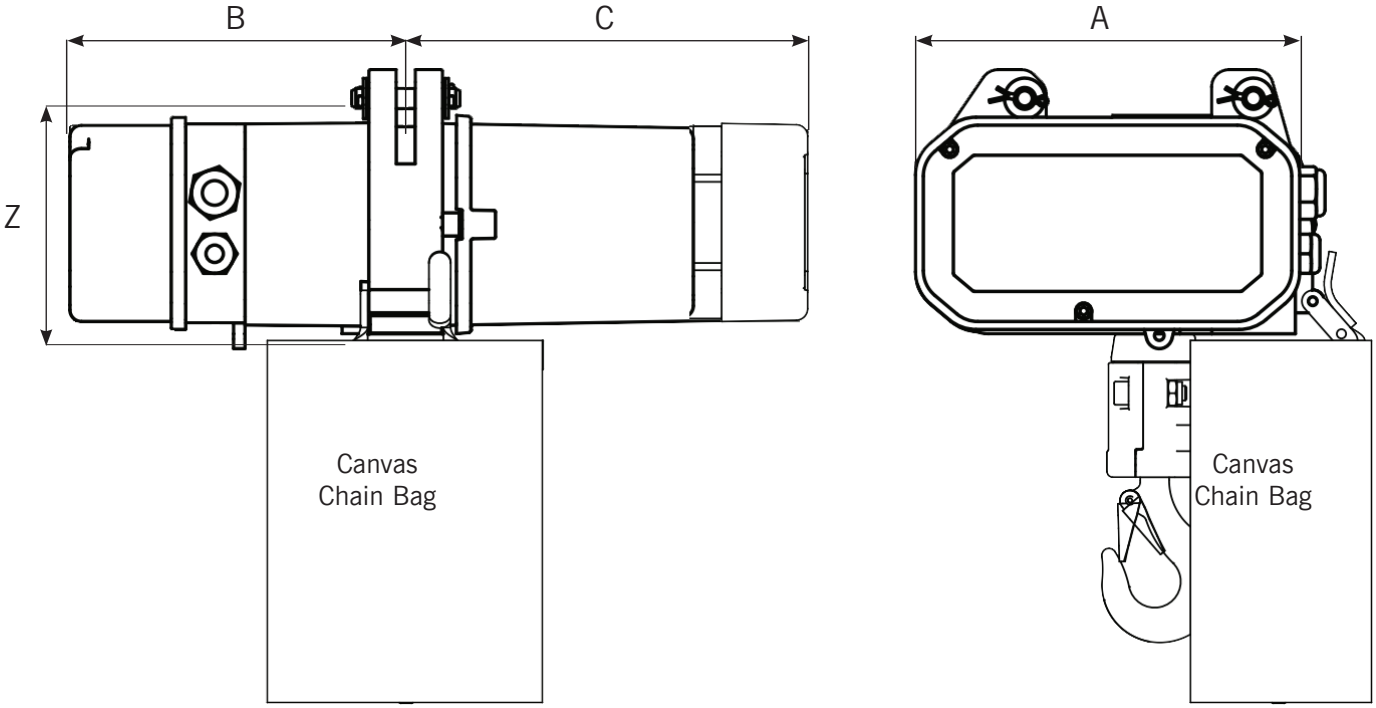

Diagram 2-14. Hoist Measurement Points.

Gorbel Hoist Type	Chain Dimension (mm x mm)	A in (mm)	B in (mm)	C in (mm)	Z in (mm)
030/52	5.2 x 15	8.4 (212)	7.6 (192)	8.7 (220)	5.4 (137)

Table 2-2. Hoist Dimensions.

Wiring Diagrams

In the next several pages, you will find **Diagrams 2-15** through **Diagram 2-16** which are the Wiring Diagrams of the GSS 115 VAC Hoist.

This page intentionally left blank.

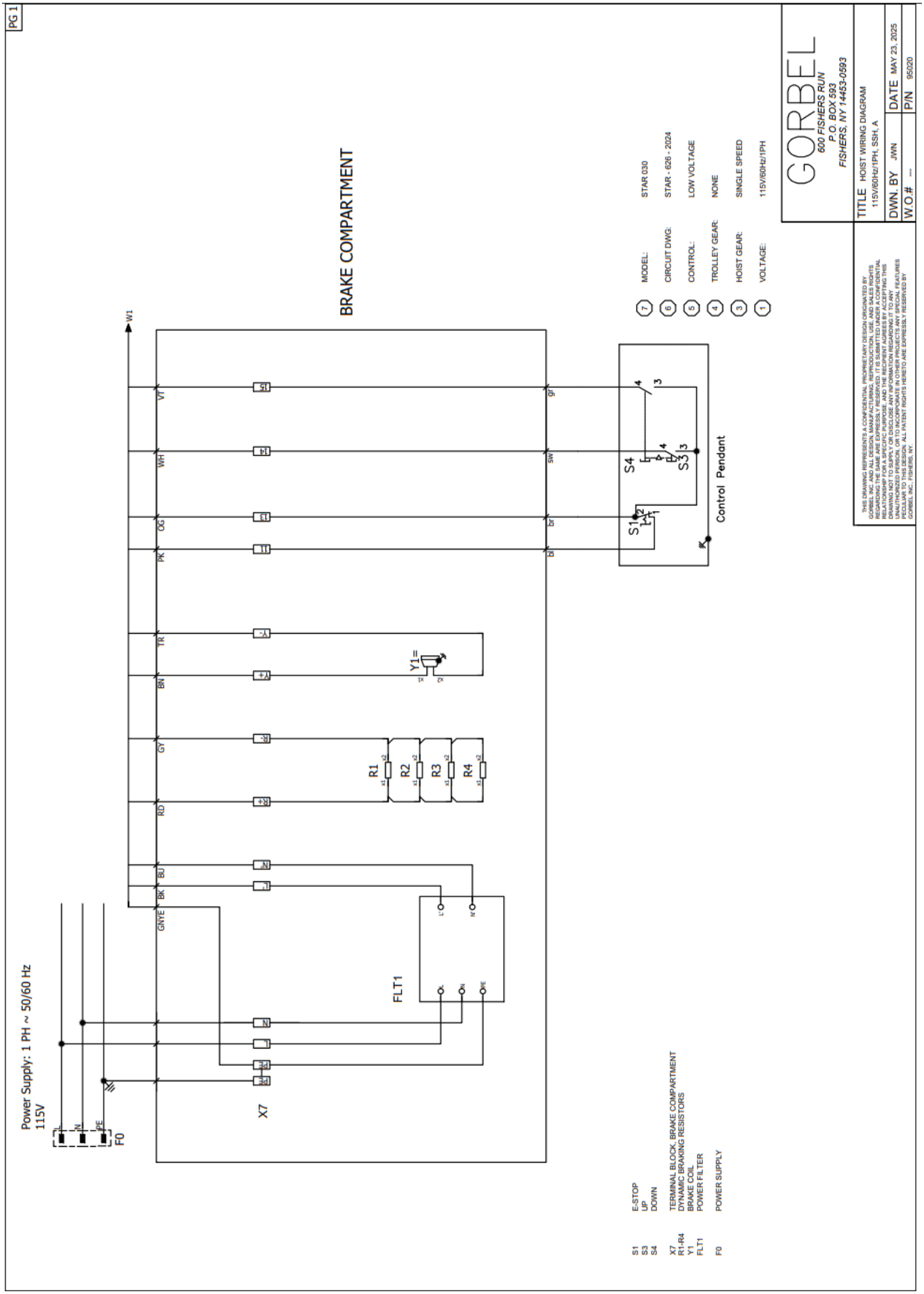

Diagram 2-15. Brake Side Wiring Schematic.

This page intentionally left blank.

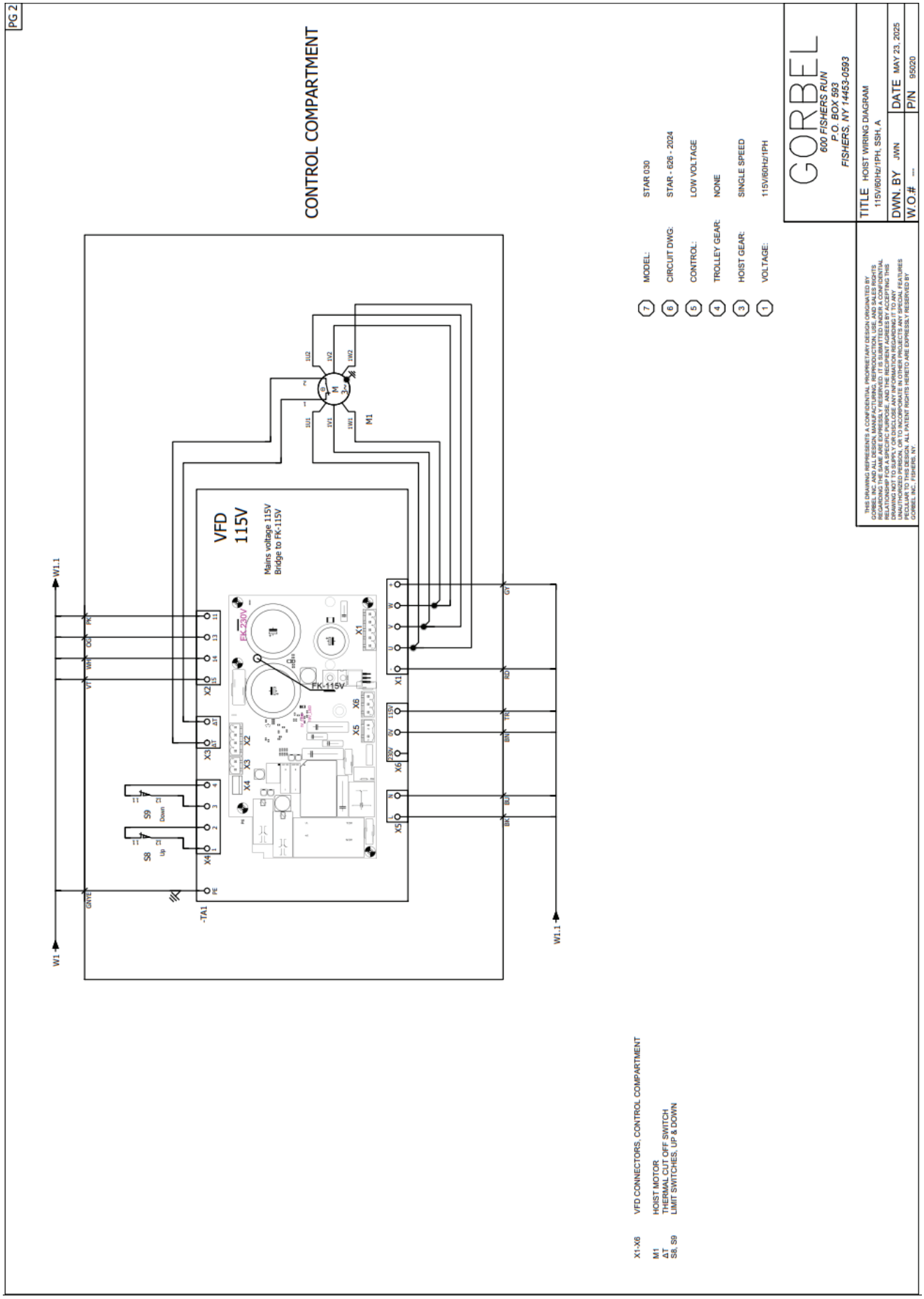

Diagram 2-16. Motor Side Wiring Schematic.

This page intentionally left blank.

Section 3 - Delivery, Transportation and Storage

WARNING!

Read all instructions first before installing or operating equipment.

Do not lift loads of more than 35 pounds (15 kilograms) without a lift assist.

Unless otherwise specifically stated, Gorbel® parts and products are designed for indoor use. Storing and/or using your items outside (even if covered), exposed to the elements, or in any method other than intended, may void all or some of the product warranty. Always store Gorbel® parts and products indoors, in a cool and dry area.

Delivery

The chain hoist, the trolley and the accessories are all packed in heavy-duty corrugated packaging. Some parts can be delivered in foam. After removal of the packaging, dispose of all packaging material safely and in accordance with applicable laws.

Check after delivery:

- For completeness of goods and documentation
- For visible transport damage.

Transport

WARNING!

Do not transport goods on damaged pallets.

Do not transport hoist or hoist components if boxes or internal packing material is damaged or missing.

Do not expose the hoist to rain or high humidity.

Storage Conditions

- Store indoors
- Temperature range -4°F to +104°F (-20°C to +40°C)
- Humidity 85% or less
- No swings in temperature that would cause condensation
- No corrosive environment
- Do not expose to direct sunlight

This page intentionally left blank.

Section 4 - Installation

WARNING!

The installation is to be performed by properly trained and authorized personnel only!

Installer Qualifications

- The worker/operator should be familiar with the hoist, hoist controls and installation/assembly procedures before being authorized to install or operate the hoist or lifting system.
- The worker/operator shall be required to read this manual, the warnings, instructions and warning labels before starting installation or operation of the hoist.
- The worker/operator shall obey all national or federal health and safety regulations during installation work and operation.
- The worker/operator shall be trained in proper rigging procedures for the attachment of loads to the hoist's load hook.
- The worker/operator shall be trained to be aware of potential malfunctions of the equipment that require adjustment or repair, and to be instructed to stop operation if such malfunctions occur, and to immediately advise their supervisor to take corrective action.
- The worker/operator shall have normal depth perception, field of vision, reaction time, manual dexterity and coordination.
- The worker/operator must **not** have a history of, or be prone to, seizures, loss of physical control, physical defects or emotional instability that could result in actions of the operator being a hazard to the operator or others.
- The worker/operator must **not** operate a hoist or lifting system when under the influence of alcohol, drugs or medication.

General

WARNING!

Overhead hoists are intended for vertical lifting of freely suspended, unguided loads only. Do not use the hoist for loads that are not lifted vertically, loads that are not freely suspended or loads that are guided.

WARNING!

Do not stand or walk under and suspended load.

Prior to installing the hoist, the installer must ensure that the power supply is shut off and securely locked and properly tagged.

Unpacking the Hoist

WARNING!

Wear appropriate personal safety and protection equipment in accordance with OSHA regulations. Obey special requirements of the installation safety equipment. For example, wear eye protection glasses, protective shoes, gloves, helmet, harness.

1. Place the package with the hoist and accessories on stable ground or a mounting pad.
2. Place this manual near you so you can use it as a reference during installation.
3. Follow all written instructions.
4. Unpack the hoist and other component parts and place them safely on the work surface.
5. Gather the following tools:
   - Set of screwdrivers
   - Set of socket head wrenches (metric)
   - Pliers/Multi-grip pliers
   - Torque wrench (20 ft./lbs. to 420 ft./lbs.)
   - Tape/ruler
6. Refer to **Diagram 4-1**. The package of the chain hoist contains the following parts:
   - Chain hoist with assembled Chain, Bottom Hook and Lift Limiter
   - Canvas Chain Bag with fastening screw (metric dimensions)
   - Fastening bolts with washers and split pins
   - Either single Suspension Eye or Hook Suspension.

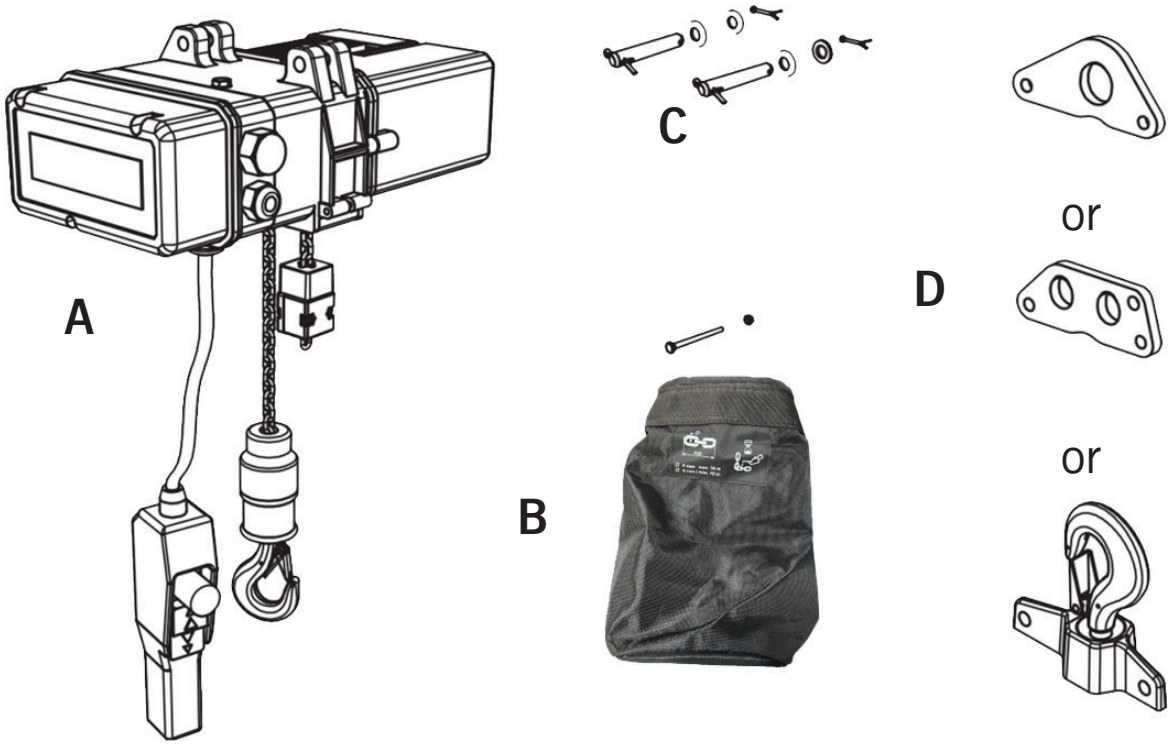

Diagram 4-1. Chain Hoist Components.

Unpacking the Hoist, Continued

Refer to **Diagram 4-2**. The push trolley packaging contains the following parts:

A. Two Side Plates.

B. Set of suspension bolts with Nylock or counter nuts (metric dimensions), washers, spacers, distance tubes.

C. Assembly instructions.

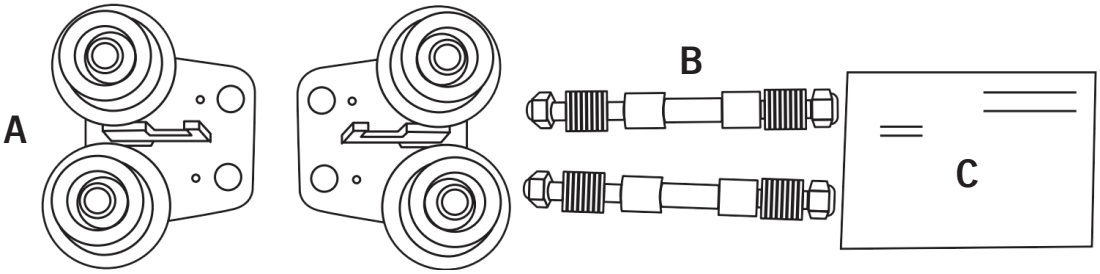

Diagram 4-2. Push Trolley Components.

Inspection Before Assembly

1. Check for visible damage.
2. Check packing list/order confirmation for complete delivery.
3. Check that the load capacities on the Hoist Type Plate of the and on the load hook match.

CAUTION!

Do not begin assembly until all parts have been located. Use only original parts from the manufacturer.

WARNING!

Prior to installation, ensure that the suspension and the supporting structure are adequate to support the chain hoist and loads. If necessary, consult a professional qualified to evaluate the suspension location and its supporting structure.

Assembly

Assembly with Single Hole Suspension Plate

CAUTION!

The single hole suspension eye must be inserted into the suspension holes on the electric chain hoist and pinned into place with the two bolts. Use washers with the bolts and secure position with correctly bent split pins.

WARNING!

On the suspension eye are two symbols: a single fall symbol and a double fall symbol. For a hoist configured for single fall, the single fall symbol has to be on the chain bag side of the hoist. For a double fall hoist, the double fall symbol on the suspension eye has to be on the bag side of the hoist body.

1. Refer to **Diagram 4-3**. Locate the symbols on the side of the suspension plate that denote the orientation of the plate.
2. Attach the Suspension Plate to the hoist.

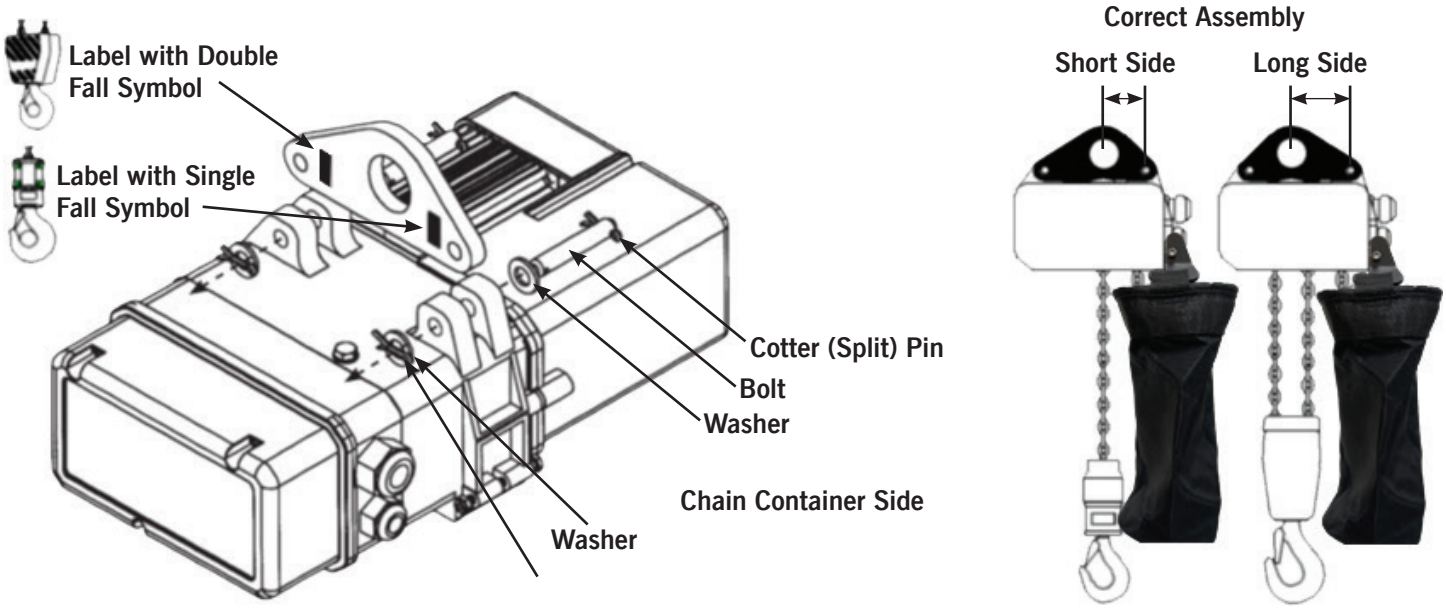

Diagram 4-3: Single and Double Fall Symbols on Single Hole Suspension Plate.

Assembly with Double Hole Suspension Plate

CAUTION!

The suspension eye must be inserted into the suspension holes on the electric chain hoist and pinned into place with the two bolts. Use washers with the bolts and secure position with two split pins.

WARNING!

The hole for the tandem trolley on the double hole suspension eye must be on the chain bag side.

1. Refer to **Diagram 4-4**. Locate the hole on the Double Hole Suspension Plate that indicates the orientation of the plate.
2. Attach the Suspension Plate to the hoist.

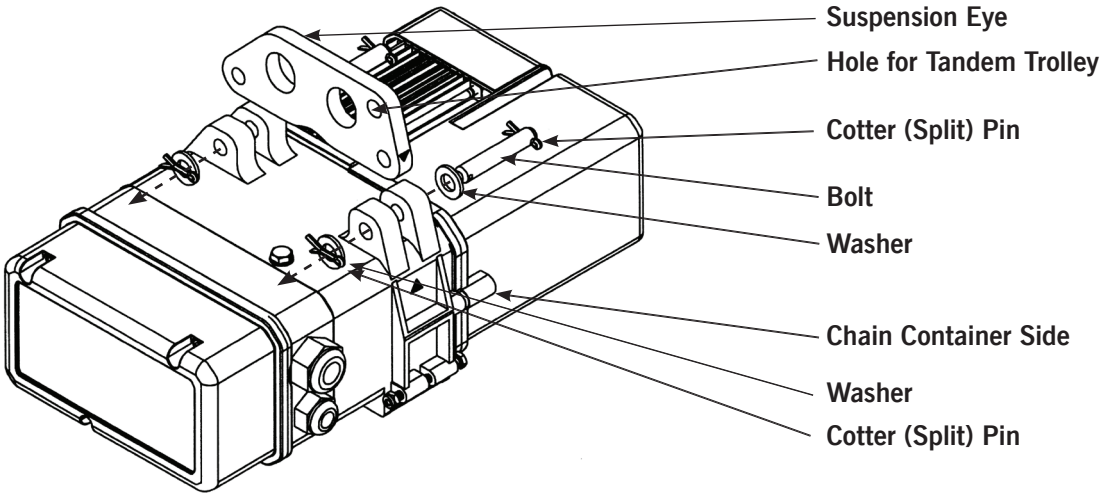

Diagram 4-4. Tandem Trolley Hole for a Double Hole Suspension Plate.

Assembly with Rigid Hook Suspension

CAUTION!

The rigid hook must be pinned with two bolts to the suspension holes on the chain hoist and secured with washers and correctly bent split pins.

WARNING!

On the hook suspension are two symbols: a single fall symbol and a double fall symbol. For a hoist configured for single fall, the single fall symbol has to be on the chain bag side of the hoist. For a double fall hoist, the double fall symbol on the hook suspension has to be on the chain bag side of the hoist.

1. Refer to **Diagram 4-5**. Locate the sticker on the Rigid Hook that indicates the orientation of the hook.
2. Attach the Rigid Hook to the hoist.

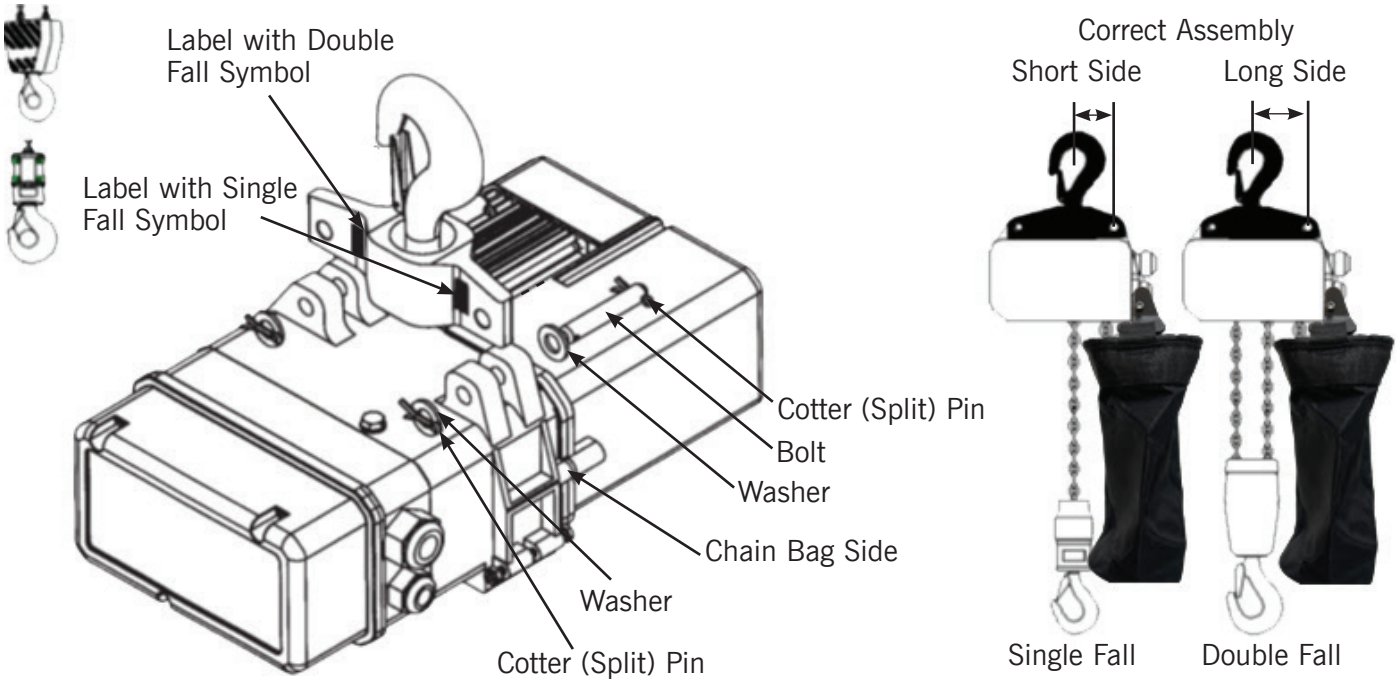

Diagram 4-5. Rigid Hook Orientation for Single and Double Fall.

Vent Screw

CAUTION!

The vent screw should be tightened only 1/4 turn past finger tight.

Refer to **Diagram 4-6**. After completion of hoist assembly, remove the plug and install the vent screw. Vent screw installation must be completed before hoist is put into operation.

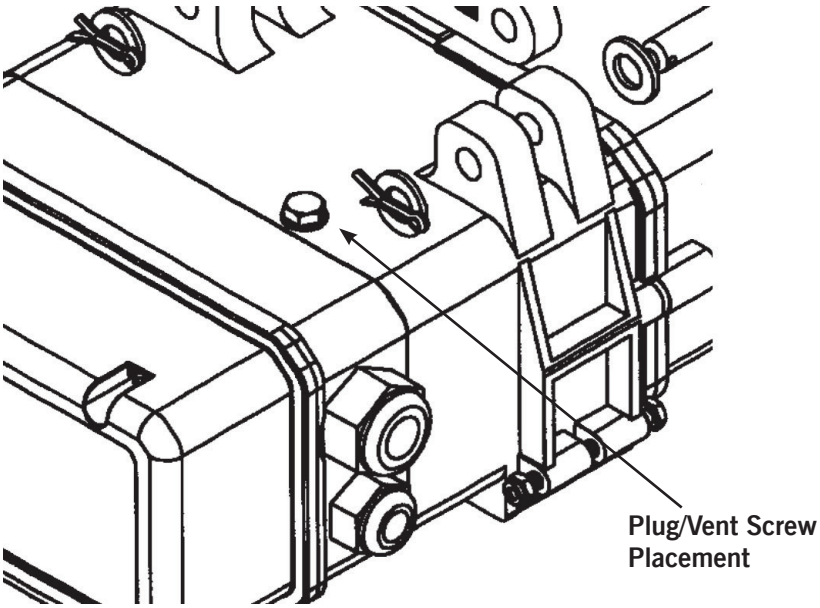

Diagram 4-6. Plug and Vent Screw Placement.

Canvas Chain Bag

The GSS 115 VAC Hoist
comes with a soft canvas chain container. All chain containers are marked with the chain diameter and the maximum quantity of chain accommodated.

Example: 5/10 means chain diameter 5 millimeters and maximum length of 10 meters (32.8 feet).

WARNING!

Double check the chain length on the hoist with the maximum accommodation length marked on the chain bag. Consider that for double fall hoists the chain length is twice the lifting height.

Do not continue if you discover a longer chain on the hoist than is marked on the chain bag.

Do not overload the chain container. It can damage the hoist and cause serious accidents.

Mounting the Canvas Chain Bag

WARNING!

Danger of serious injuries for hands and fingers!
Keep hand and fingers away from the running chain.
Use the Nylock Nut only once.

1. Refer to **Diagram 4-7**. Insert the chain end with lift limiter, its rubber bumper and spring actuator (if scope of supply) loosely into the chain container.
2. Assemble the canvas chain container onto the chain hoist with screw and secure with nylock nut.
3. Feed the chain into the canvas chain container by means of the lifting motor, press 'UP' button.

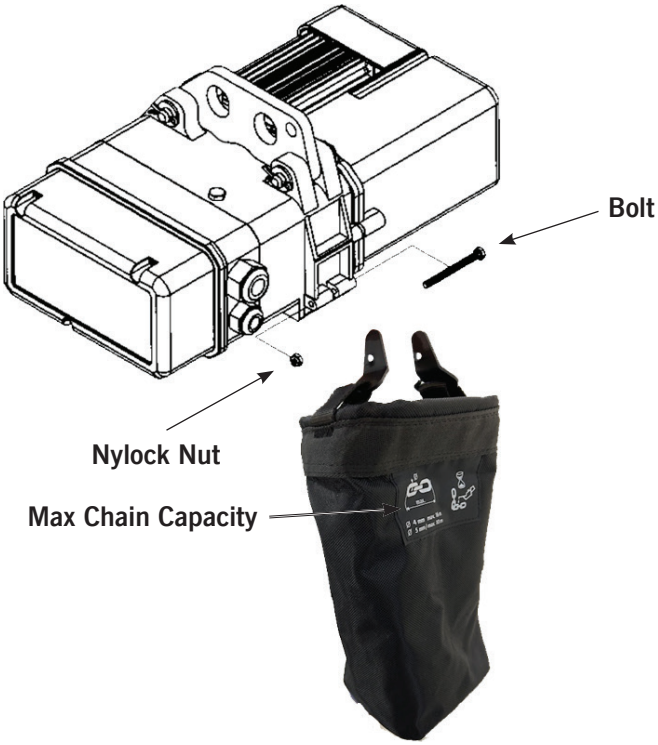

Diagram 4-7. Canvas Chain Bag Placement.

Connecting Electrical Power

CAUTION!

The hoist must be connected only to a power source that complies with electrical codes for its input voltage rating.

ELECTRICAL SHOCK HAZARD!

Hoist electrical connection must only be conducted by a qualified electrician.

Main power must be disconnected from the hoist until it is fully configured and ready for power to be applied.

ELECTRICAL SHOCK HAZARD!

Check that the input voltage complies with that specified on the type plate. Connect the power supply cable and control cable in accordance with wiring diagram. Depending on festoon length, we recommend a minimum 14 AWG 4 conductor cable. Your application may require 12 or 10 gauge.

WARNING!

Do not use the hoist when the direction of lift does not comply with the symbols on the control pendant. Under the conditions, the electric limit switches will not be working.

Refer to **Diagram 4-8.** Connect the hoist Power Cord to a 115 VAC receptacle or extension cord.

Diagram 4-8. Plugging in the Hoist.

Limit Switches

Refer to **Diagram 4-11.** For the proper function of the limit switches, the up/down directions at the pendant must correspond to the moving direction of the hook. Check the function of the limit switches for lifting and lowering prior to use.

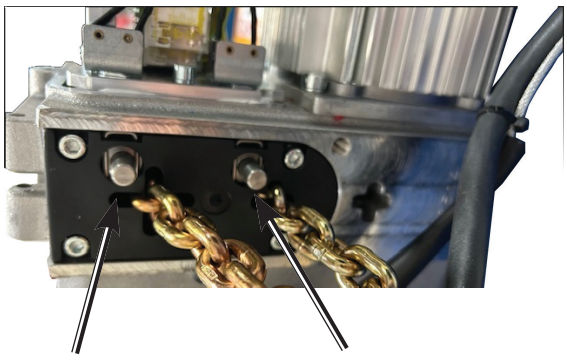

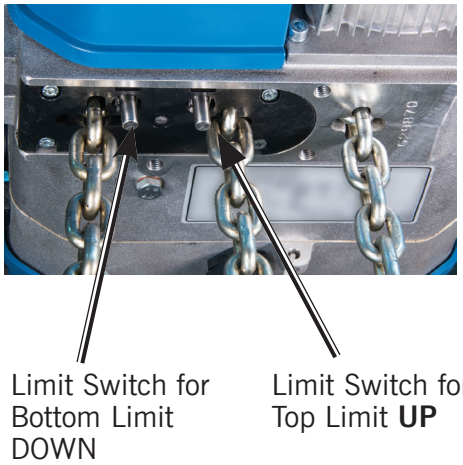

Diagram 4-11. Limit Switches 1 Fall (l) and 2 Fall (r) Hoists.

Trolley

Refer to **Table 4-1** and **Diagram 4-12.** The Gorbel GSS Series 115VAC Hoist uses only a Push Trolley. There is no power trolley option for this hoist.

Part No.	Standard Flange Width (in)	Part No.	Larger Flange Width, S1 (in)	Part No.	Larger Flange Width, S2 (in)	Capacity (lbs.)	Hoist Type
95161	2.6-5.31	95171	5.39-8.46	95181	8.66-11.81	2000	030-52

Table 4-1. Trolley Specifications.

CAUTION!

For all other beam sizes, inform Gorbel and the correct Push Trolley will be made available.

Push Trolley with two connecting bolts for Double Hole Suspension Eye.

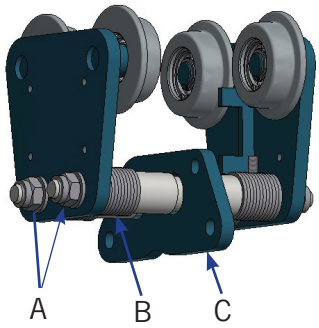

A. Suspension Bolts
B. Spacing Washers
C. Suspension Eye

Diagram 4-12: Trolley Components.

Trolley Assembly

Refer to **Diagram 4-13, Steps 1-6**. Perform the following steps to assemble the Trolley:

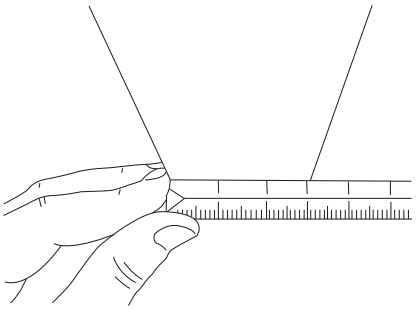

Step 1: Measure Beam Width.

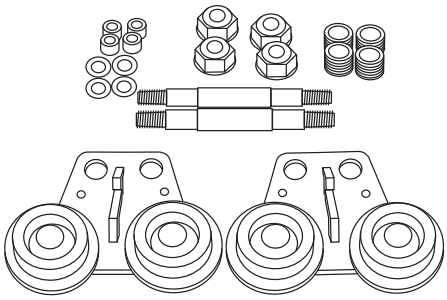

Step 2: Prepare Parts for Assembly.

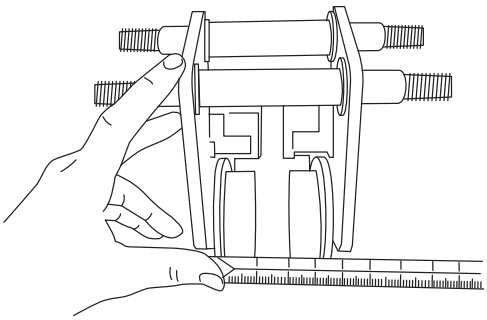

Step 3: Determine quantity of washers.
Note: Washers must be used symmetrically.

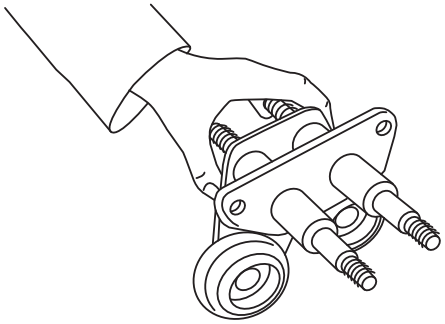

Step 4: Assemble one side plate with washers, spacer and suspension plate.

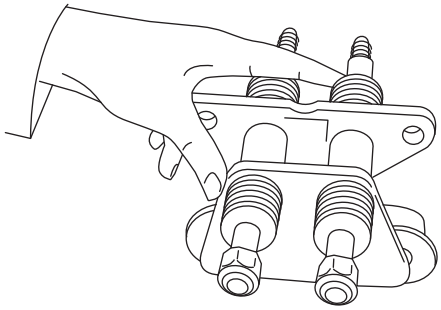

Step 5: Fit Nylock nuts with washers on the side plate.

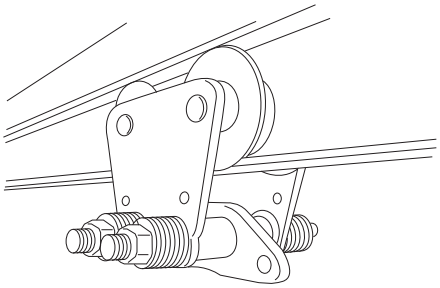

Step 6: Put the trolley together on the beam, allowing 1/16 inch between the running wheel flange and the beam flange. Tighten the nylock nuts.

Diagram 4-13, Steps 1-6: Trolley Assembly.

WARNING!

A clearance of 1/16 inch between the running wheel flange and the beam flange is necessary. The width is adjusted by inserting spacing washers **symmetrically**. The suspension eye is mounted between the spacing bushings on the trolley connecting bolts.

Use the original parts only.

Trolley Assembly, Continued

7. Double-check the space between girder flange and trolley wheel (approximately 1/16 inch on each side).
8. Refer to **Table 4-2**. Tighten the nuts of the connecting bolts with a torque wrench only.

Hexagon nuts	Tightening torque in ft/lb. (Nm)
M16x1.5	55 (75)
M22x1.5	110 (150)
M36x1.5	415 (560)

Table 4-2. Trolley Torque Values.

9. Fit the electric chain hoist to the trolley assembly with bolts, washers and split pins.
10. Check the free movement between the trolley and the chain hoist in all directions as shown in **Diagram 4-14**.

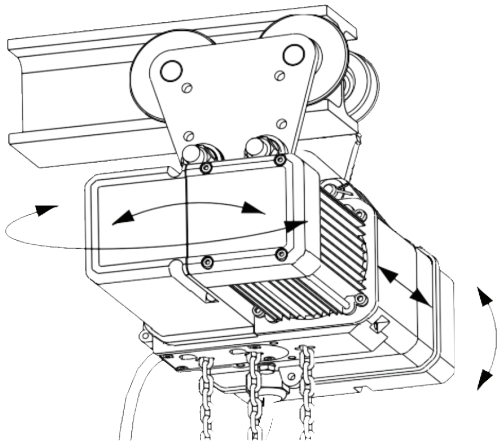

Diagram 4-14. Testing Hoist Movement on Trolley.

CAUTION!

Movement in the directions shown by the arrows must still be possible between the hoist and the trolley when assembly is complete.

The type of suspension plate depends on the respective chain hoist type and trolley type (beam flange width).

Section 5 - Operation

WARNING!

Persons intending to operate the hoist must be trained prior to commencing operation.

Refer to Section 1 - Hoist Safe Operating Practices before operating this hoist.

WARNING!

Improper operation of this hoist can lead to unsafe conditions and **presents a risk of serious property damage, INJURY or DEATH.**

Hoist Operator Qualifications

1. The worker/operator shall be familiar with the hoist, hoist controls and installation/assembly procedures before being authorized to install or operate the hoist or lifting system.
2. The worker/operator shall be required to read this manual, the warnings, instructions and warning labels before starting installation or operation of the hoist.
3. The worker/operator shall obey all national or federal health and safety regulations during installation work and operation.
4. The worker/operator shall be trained in proper rigging procedures for the attachment of loads to the hoist hook.
5. The worker/operator shall be trained to be aware of potential malfunctions of the equipment that require adjustment or repair, and to be instructed to stop operation if such malfunctions occur, and to immediately advise his supervisor to take corrective action.
6. The worker/operator shall have normal depth perception, field of vision, reaction time, manual dexterity and coordination.
7. The worker/operator must **not** have a history of or be prone to seizures, loss of physical control, physical defects or emotional instability that could result in actions of the operator being a hazard to the operator or others.
8. The worker/operator must **not** operate a hoist or lifting system when under the influence of alcohol, drugs or medication.

Hoist Inspection Before Starting Work

WARNING!

Before starting work, inspect the electric chain hoist, trolley, chain and all load bearing components for visual defects.

Daily Inspection and Checks

1. Functional test of brake.
2. Functional test of limit switches.
3. Check that the trolley runway is free from obstructions and that the end stops on the trolley runway are fitted and secured.
4. Inspect the load chain for sufficient lubrication and lubricate if necessary.
   Refer to Lubrication in **Section 6**.
5. Visually check the load chain for external defects.

WARNING!

Do not operate a hoist with defects. Ensure all defects are corrected before operating the hoist.

WARNING!

Confirm that the load is properly attached to the hoist and trolley by running a short test cycle. To do this, lift and lower the load several times.

WARNING!

The selection and calculation of the proper suspension point and beam construction for the hoist and trolley are the responsibility of the hoist owner.

Preparing for a Lifting Operation

WARNING!

Always attach the load to the hook saddle. **Never attach the load to the load hook tip, and never attach the hoist by the suspension hook tip.**

WARNING!

Do not remove the hook safety latch. Make sure that the latch is safely closed after suspending the load.

Preparing for a Lifting Operation, Continued

WARNING!

Never use the load chain as a sling chain. Use only approved and certified slings or lashing devices to attach the load.

Attaching the Load

1. Slack the hoist chain a sufficient amount to place the load hook.
2. Attach the load to the load hook saddle, ensuring that the load is not on the hook tip, and that the hook safety latch is fully closed.

Lifting and Lowering the Load

CAUTION!

Do not pull on the hoist control pendant. Push the electric chain hoist, its bottom hook or the suspended load to move a hoist with a push trolley.

1. Lift the load or the bottom hook by operating the 'UP' button.
2. Lower the load or the bottom hook by operating the 'DOWN' button.

If you press and hold the up or down button, hook speed will increase linearly, but is load dependent. Heavier loads will lift and lower more slowly.

NOTE: The GSS Hoist measures weight and sets speed on the lift. The lowering speed will be the same as the lifting speed. If you lift and deposit the load, you may need to lift the unloaded hook to reset downward travel speed to maximum.

CAUTION!

The slow speed must only be used for short hook travel distances. The lift limiter (chain end stop) must not be used as an operational limit switch.

Emergency Stop

The Emergency Stop is a red, mushroom shaped button on the hoist pendant. In the event of a hazardous situation, pushing the Emergency Stop will stop all hoist movement.

WARNING!

Operating the emergency stop does not automatically disconnect the main power to the chain hoist or the trolley. If you activate the Emergency Stop, safely clear the reason for the stop, and then release the Emergency Stop button by rotating in clockwise direction.

Lift Limiter

The lift limiter (chain end stop) will halt the downward movement of the load hook near the end of the chain. For this reason, it must be connected to the idle chain strand.

WARNING!

The lift limiter should be assembled at the third link from the end of the idle chain strand. In cases where the end of the idle chain strand will be fixed to the chain hoist body or chain container frame, the lift limiter must be assembled 20 inches (50 cm) from the end of the idle chain strand.

Limit Switches

The hoist Limit Switches are safety devices and must not be used as operational movement limiters.

Section 6 - Maintenance

WARNING!

Maintenance is to be performed by **properly trained and authorized personnel only.**

ELECTRICAL SHOCK HAZARD!

Maintenance work must only be carried out on an unloaded electric chain hoist with all power to the hoist disconnected and tagged out.

Refer to **Table 6-1**. Perform maintenance checks in accordance with the interval shown.

Maintenance Schedule at Normal Operation Duty Cycle	**Interval**		
	Daily	Every 3 months	Yearly
Visual check of the entire hoist	•		
Function check of the brake	•		
Function check of the lift limiter		•	
Check the brake gap			•
Maintenance or adjustment of the clutch			•
Wear of the load chain and chain guide		•	
Lubrication of the load chain		•	
Wear of the rubber elements (visual check) and load limiters	•		
Lubrication of single and double fall hooks, thrust bearings, check condition of the pin which prevents the hook nut from loosening and chisel punch marks			•
Check condition of safety latch	•		
Check all screws, hold down, chain guide, chain fall safety devices			•
Check condition and safe positioning of the chain container		•	
Check electric cable, power cable and pendant control			•
Check trolleys and wheels			•

Table 6-1. Maintenance Schedule.

WARNING!

If the hoist is working under harsh operating conditions such as multi-shift operation, high percentage of work with normal load, high switching, high temperature environment, or poor environmental conditions, inspection intervals should be twice as frequent, at minimum.

WARNING!

The electric chain hoist must be overhauled after it has reached its Safe Working Period (S.W.P.) or at no later than 10 years if no maintenance records are available. Correct recording of the full load operating hours is the sole responsibility of the owner.

Load and Suspension Hooks

Refer to **Diagram 6-1** and **6-2** for Single Fall and Double Fall Load Hook configurations.

- Check condition of the hook (wear marks and center punch spacing).
- Check plastic cover of bottom hooks for chain 4x12 mm and 5.2x15 mm. Change if worn.
- Check function of safety latch.
- Check hook nut and securing pin.
- Check axial bearing and re-grease if necessary.
- Replace rubber buffer if worn.

Load hooks have to be replaced if the length between the chisel punch marks (Y dimension) widened more than 10%. The permissible values are shown on the hook certificate.

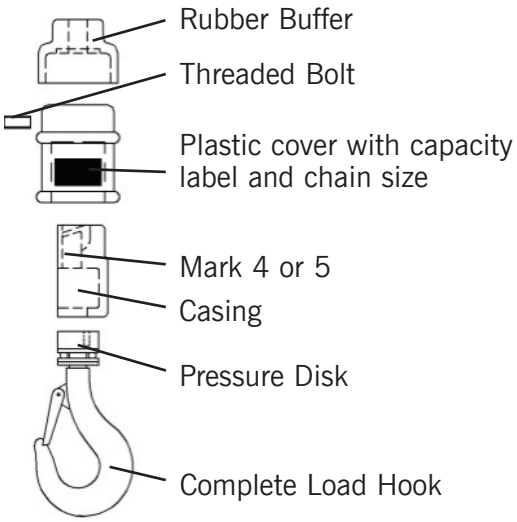

Diagram 6-1: Single Fall Load Hook.

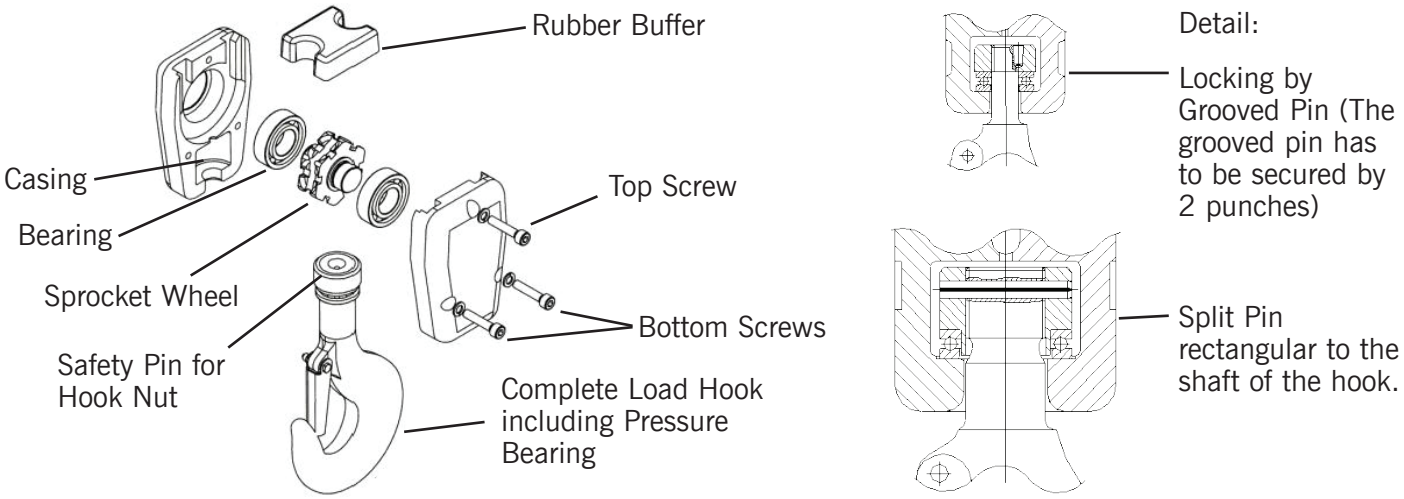

Diagram 6-2: Double Fall Load Hook.

Load and Suspension Hooks, Continued

For the assembly of the Load Hook, tighten the connection screws to the following torque values:

Chain Dimension (mm x mm)	Max. Load Capacity in Tons	Dimension of screws (metric)	Quantity of Screws		Torque in ft./lbs. (Nm)	
			Top Screw	Bottom Screws	Top Screw	Bottom Screws
5.2x15	1.0	M6x40 DIN 912	2	1	7.5 (10)	4.5 (6)

Table 6-2. Torque Values for Two Fall Load Hook.

Single Hole Suspension Eye Hook Suspension

CAUTION!

When changing from single fall to double fall, turn the suspension eye 180 degrees. The hole position must be directly above the load hook. The relevant label on the suspension hook must be on the chain container side.

Load Chain, Chain Guide and Hold Down

WARNING!

The chain guide and hold down must be replaced if a new chain will be assembled. For chain, chain guide and hold down, use original spare parts only from manufacturer or from manufacturer's approved suppliers.

Use of other non-authorized spare parts may cause serious accidents.

Refer to **Table 6-3** and **Diagram 6-3**. The chain must be replaced if the:

- Nominal thickness at the points of contact is reduced by 10%.
- Chain or a link is elongated by 5%, or an eleven links piece of chain is elongated by 2%.
- Links do not move properly at their contact points due to wear in the contact area.

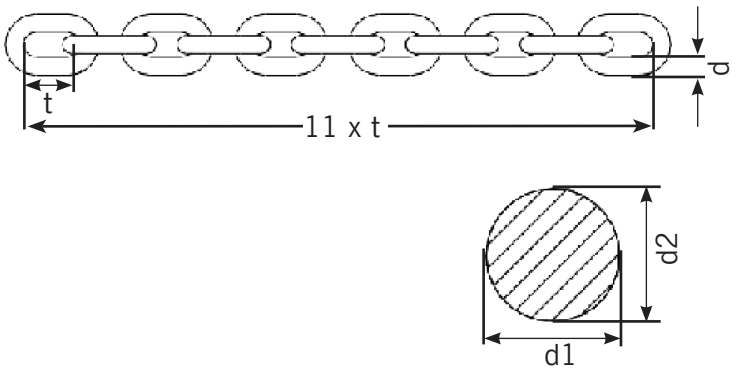

t = nominal length of one chain link

d = nominal diameter of chain link

d1, d2 = actual diameters

$$dm = \frac{d1 + d2}{2}$$

Diagram 6-3. Load Chain Dimensions.

Load Chain, Chain Guide and Hold Down, Continued

Chain dimensions	mm x mm	5 x 15	
		inch	mm
Nominal diameter of link	d	0.20	5
Wear limit of diameter	dm	0.18	4.7
Length over 1 link	t	0.59	15
Wear limit of 1 link	tmax	0.62	15.8
Length over 11 links	11 x t	6.50	165
Wear limit of 11 links	(11 x t)max	6.63	168.3

Table 6-3. Load Chain Wear Tolerances.

WARNING!

Continuous monitoring of the load chain is mandatory. The load chain must be tested before starting operation and after approximately 100 operating hours or 5,000 load cycles under normal conditions and more often under harsh and severe conditions.

Load Chain Testing Procedure

- Test/check the full length of chain.
- Test/check especially uppermost and lowest chain position.
- Check for wear, cracks, deformation and other damages.

Replacing the Load Chain and the Hold Down

Refer to **Diagram 6-4**. The chain guide and the hold down **must be changed** when the load chain is being replaced.

1. Let worn chain move out.
2. Loosen screws (1).
3. Take out chain guide (2).

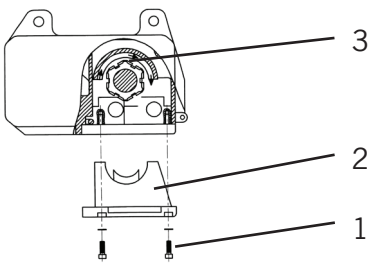

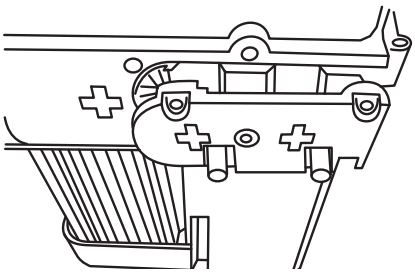

Diagram 6-4. Chain Guide Removal.

Continued on the next page...

Replacing the Load Chain and the Hold Down, Continued

Refer to **Diagram 6-5**. Perform the following steps:

4. Turn the hold down out.
5. Put a new hold down in by turning it through the groove over the sprocket wheel.
6. Push chain guide in and tighten the screws.
7. Fit new chain as described in the preceding section.

Diagram 6-5. Chain Hold Down Removal.

Load Chain Assembly - Single Fall Hoist

Before inserting the load chain, and to prevent damage to the Chain Guide, we recommend you reduce the clutch torque, so that the chain is not pulled with full force. After the new chain is assembled, set the clutch to the original value. Observe dimensions noted on the brake coil.

Refer to **Diagram 6-6 and Diagram 6-7 (next page)**. Perform the following steps:

NOTE: If the hoist is delivered with a pre-assembled length of chain, the load chain can be inserted by means of a slotted chain link instead of the pull-in wire.

1. Push the pull-in wire (special tool) into and through the chain guide cross plate shown until the wire hook is pushed out the opposite side.
2. When feeding the chain into the hoist, ensure that the first link is aligned. Pull the wire so that the first link slides into the chain guide. Then operate the hoist in inching mode, lifting direction until the flat link slides in the picket of the sprocket wheel.
3. Jog the hoist in the down direction to feed the chain through.

Diagram 6-6. Inserting the Push Wire.

Continued on the next page...

Load Chain Assembly - Single Fall Hoist, Continued

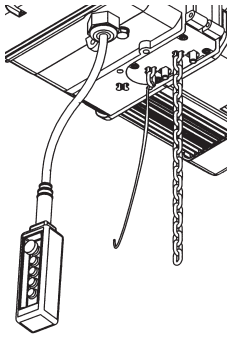

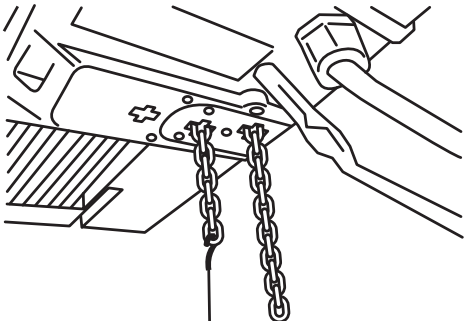

Diagram 6-7. Inserting the New Chain.

Load Hook Assembly - Single Fall Version

Refer to **Diagram 6-8**. Place the rubber buffer on the chain and assemble the load hook.

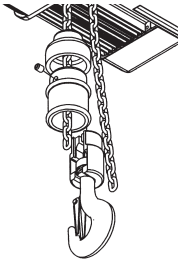

Variant without spring actuator

Diagram 6-8. Load Hook Assembly, Single Fall Version.

Load Chain and Load Hook Assembly - Double Fall Version

Refer to **Diagram 6-9.**

1. Insert the load chain into the hoist as described for the single fall version.
2. Pull the chain through the hook block using the pull in wire (special tool). When feeding the chain into the hoist, ensure that the first link is aligned parallel to the ends (hence at right angles to the sides).

Diagram 6-9. Load Chain Assembly, Double Fall Version.

CAUTION!

The chain must not be twisted between the hook block and the hoist body at any of the two chain falls! **If assembly is not possible without a twisted chain, cut one link off to allow correct assembly.**

Refer to **Diagram 6-10.**

3. Loosen the four screws of the chain guide and remove the chain guide from the hoist.

Diagram 6-10: Removing the Chain Guide Double Fall Hoist.

Refer to **Diagram 6-11.**

4. Pull the U-shaped fork out of the hoist.
5. Pull the chain end from the hook up to the cross chain hole on the under casing side of the casing.

Continued on the next page...

Load Chain and Load Hook Assembly - Double Fall Version, Continued

6. Insert the chain into the cross shaped opening. See detail below.
7. Insert the fork to capture this link.

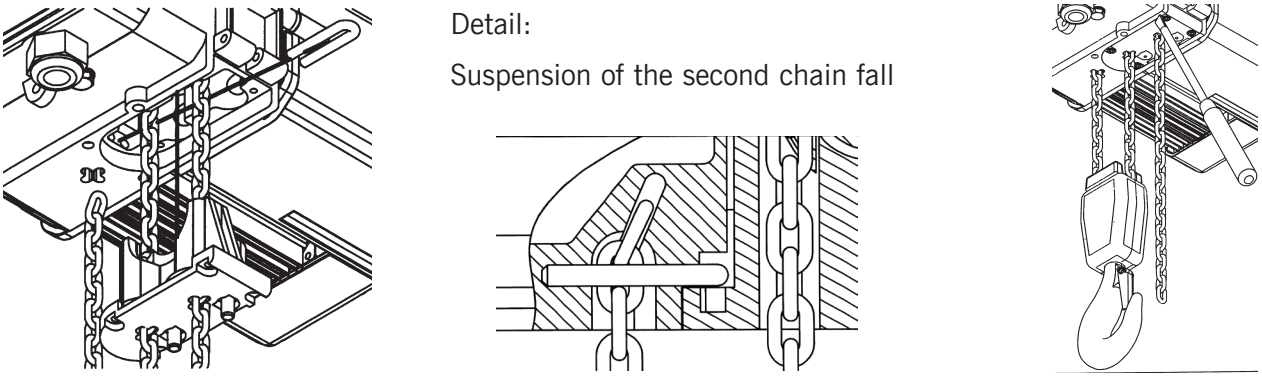

Diagram 6-11. Attaching the Second Chain Fall to the Hoist.

8. Pull hard downward on the chain to ensure that it is securely attached.
9. Re-assemble the chain guide.
10. Double check that the chain is not twisted.
11. Lubricate the entire length of chain.

WARNING!

Do not put the hook block through the two chain falls.

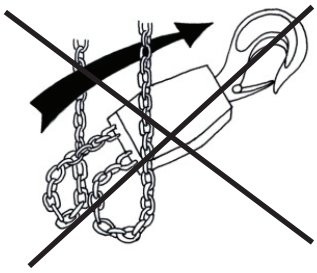

Lift Limiter Assembly

Refer to **Diagram 6-12**.

1. Lower the load hook to leave 20 inches (50 cm) of the dead end of the load chain at the dead end side.
2. Attach the rubber buffer for the lift limiter onto the remaining dead end of chain.
3. Attach the lift limiter onto the 3rd link of the dead end (standard).
4. Attach the lift limiter 20 inches (50 cm) away from the dead end when the chain is fixed to the hoist body (option).

Continued on the next page...

Lift Limiter Assembly, Continued

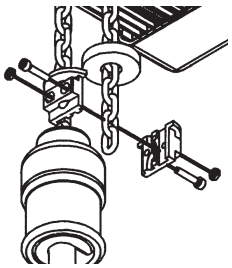

Variant without spring actuator

Diagram 6-12: Attaching the Lift Limiter.

CAUTION!

The lift limiter is designed to prevent the dead end of chain running out of the hoist. It is used as an emergency stop and cannot be used regularly as an operational lower limit switch. If the rubber buffer of the lift limiter has a metal washer, this washer should be mounted toward the electric chain hoist body.

Chain Bag Assembly and Filling

1. Assemble chain container.
2. Allow the chain to run into the chain container.
3. Lubricate the entire length of the chain.

WARNING!

Fill the chain bag only by running the chain through the hoist by using the motor (press ‘UP’ button). To prevent knots inside the chain bag, do not feed a long piece of chain into the chain container directly.

Continued on the next page...

Checking the Hoist Brake

WARNING!

Do not attempt to dismantle the brake or adjust the brake air gap.

NOTE: The brake is maintenance free. To guarantee the its correct function, the air gap must be checked. When the maximum air gap is reached, replace the brake. The specifications for the air gap and coil resistance are shown on a sticker on the brake (**Diagram 6-13**), and in **Table 6-4**.

Diagram 6-13. Brake Type Plate.

Brake Type	Screws acc. to DIN 912	Tightening Torque ft.lbs. (Nm)	Coil Resistance R20 nominal	Air gap S_L nominal in (mm)	Air gap S_L maximum in (mm)
BFK 457-06	3xM4	2.1 (2.8)	2101	0.008 (0.2)	0.020 (0.5)

Table 6-4. Brake BFK 457-06 Specifications.

- Check visually for free movement of the anchor plate.
- Brake coil, anchor plate screws and bushings shall be free of rust/corrosion.
- Check for excessive amount of brake dust and remove dust if necessary.

Checking the Hoist Brake Air Gap

ELECTRICAL SHOCK HAZARD!

Maintenance work must only be carried out on an unloaded electric chain hoist with all power to the hoist disconnected and tagged out.

1. Loosen screws of cap for gear cover.
2. Remove cap for gear cover.
3. Refer to **Diagram 6-14**. Measure air gap between magnet coil and anchor plate with feeler gauge.
4. Compare measured air gap value with maximum air gap value in able above.
5. If necessary, replace brake.

Continued on the next page...

Checking the Hoist Brake Air Gap, Continued

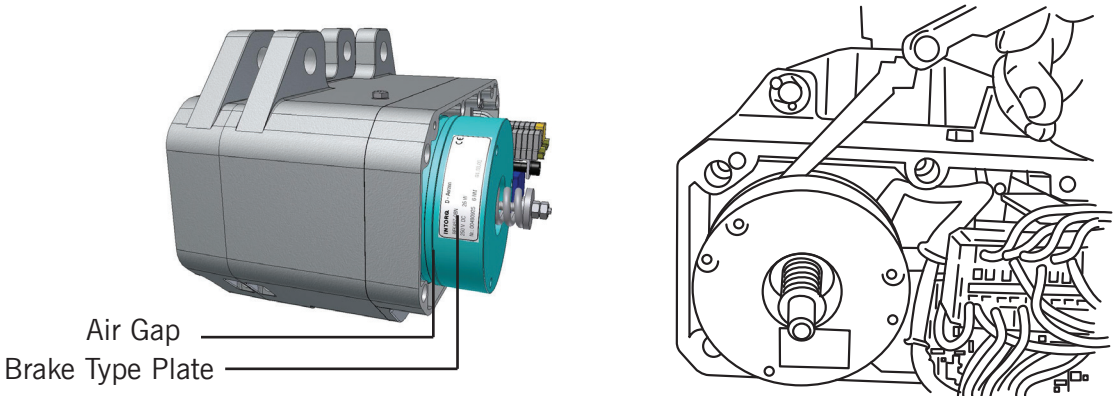

Diagram 6-14: Checking the Brake Gap.

Hoist Brake Replacement

WARNING!

Brake replacement **MUST** be completed without a load on the hoist.

1. Loosen screws of cap for gear cover.
2. Remove cap for gear cover.
3. Disconnect brake cables.
4. Refer to **Diagram 6-15**. Loosen the three fastening screws of the brake unit.

WARNING!

Oily brakes may lead to serious accidents.
The brake friction lining must not come into contact with any lubricant oil, grease or similar materials. Replace oily or greased brakes.

5. Remove worn out brake unit.
6. Fit new brake unit onto the motor shaft.
7. Fit the brake unit using the three cylindrical screws which are scope of supply of the replacement unit.
8. Tighten the screws with tightening torque according **Table 6-4**.
9. Connect brake cables according to wiring diagram.
10. Reinstall Brake Side Cap.

Continued on the next page...

Hoist Brake Replacement, Continued

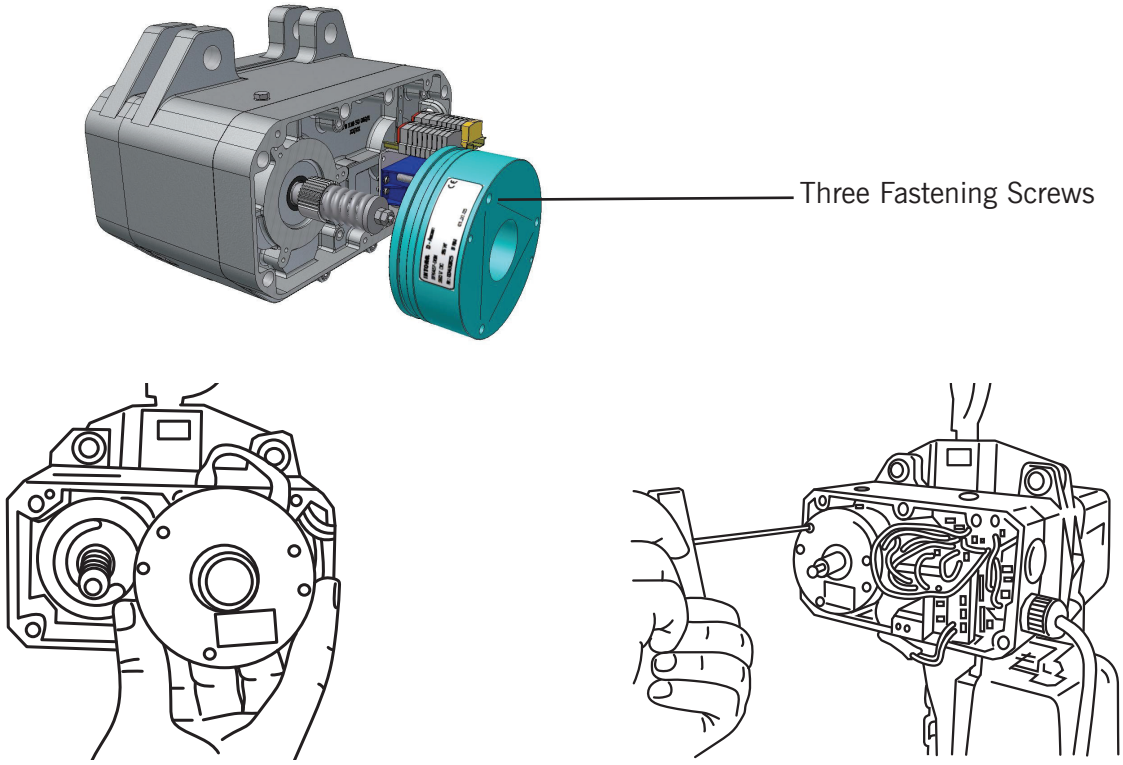

Diagram 6-15. Brake Disassembly.

Lift Motor Components

Refer to **Diagram 6-16**. The Lift Motor (5) is a modular assembly. The Cooling Fan (4) is mounted on the shaft under the Fan Cap (3). The Clutch Hub (12) with a Coupling (13) is mounted with a key and retaining ring onto the drive side of the Lift Motor (5). The Motor Flange (7) has a center ring and four holes for fixing it to the hoist body. The Motor Wires (15) exit the motor on the Motor Flange.

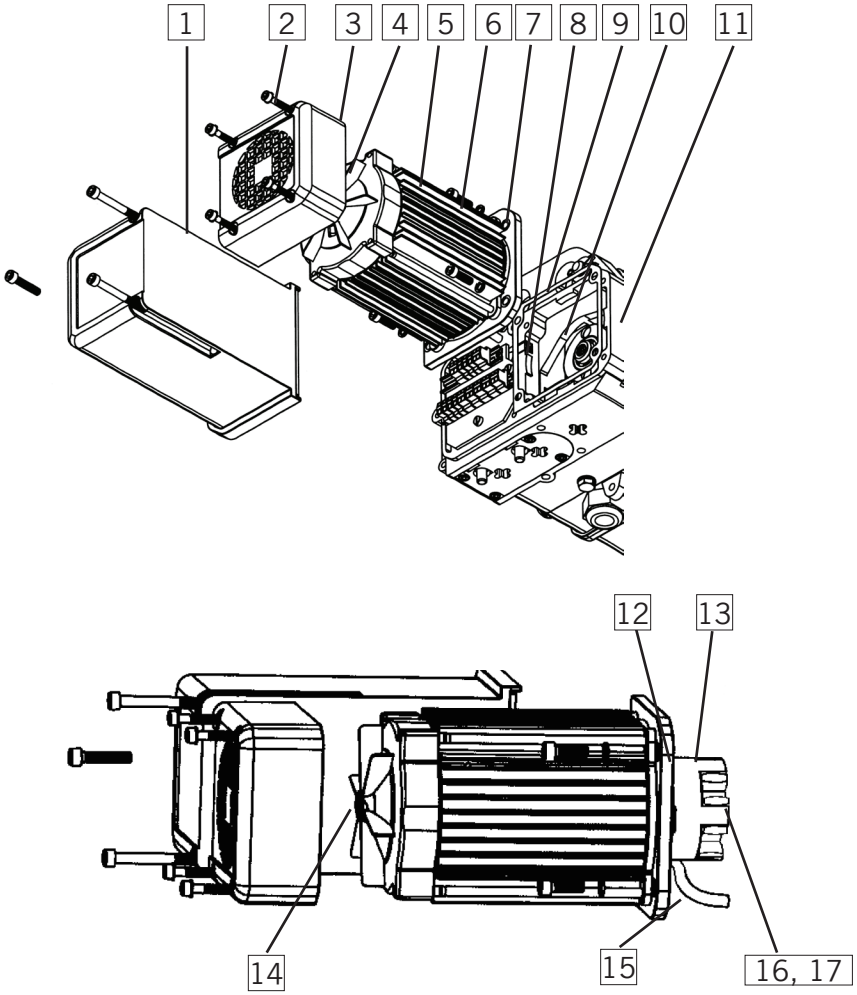

1. Motor Side Control Cap
2. Fan Cap Screws
3. Fan Cap
4. Cooling Fan
5. Lift Motor
6. Motor Flange Screws
7. Motor Flange
8. Rubber Seal
9. Sealing Paste
10. Clutch Drive Disc
11. Gear Housing
12. Clutch Hub
13. Coupling Teeth
14. Motor Shaft
15. Motor Wires
16. Feather Key
17. Retaining Ring

Diagram 6-16. Lift Motor Components.

Disassembling the Lift Motor

Refer to **Diagram 6-16. Lift Motor Components**, and **Diagram 6-17. Lift Motor Disassembly.**

1. Loosen the screws of the Motor Side Control Cover (1) and remove cover.
2. Loosen the Fan Cap Screws (2) of the Fan Cap (3) and remove cap.
3. Disconnect the Motor Wires (15) using the wiring diagram.
4. Loosen the Motor Flange Screws (6) and remove the motor from the hoist body. Do not damage the Motor Wires (15). Do not lose the Rubber Seal (8) for the Motor Wires.

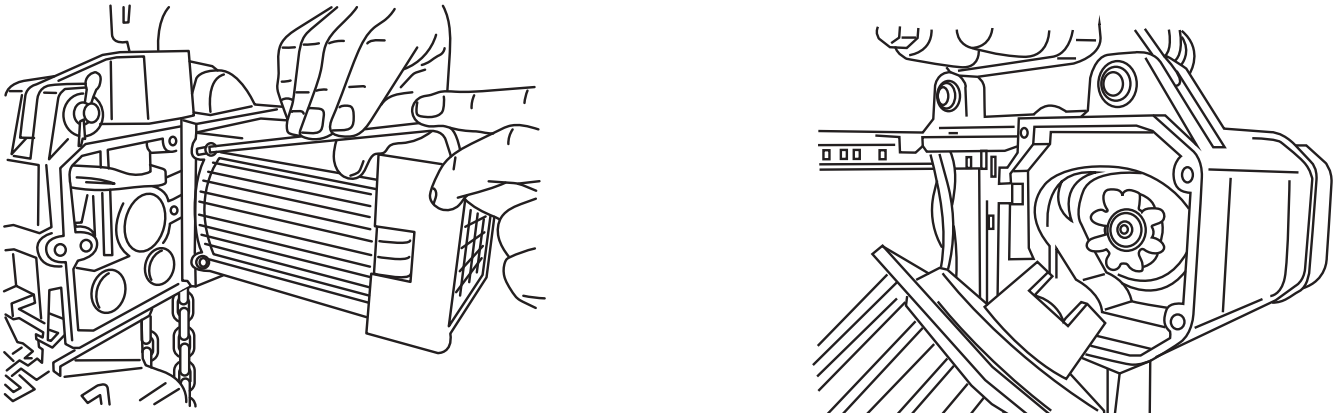

Diagram 6-17. Lift Motor Disassembly.

5. Press Coupling Hub Teeth (13) onto the Motor Shaft (14) until the Shaft Collar is reached. Take care that the Feather Key (16) is tightly connected between Motor Shaft (14) and Clutch Hub (12).
6. Secure the Clutch Hub with a Retaining Ring (17) onto the shaft.
7. Pour Sealing Paste (9) on the Motor Flange (7). Remove excess paste.
8. Re-install the Lift Motor on the Gear Housing (11). The Motor Wires must be placed in the gap in the Gear Housing and sealed with the Rubber Seal (8). Prevent the cables from damage or pinching. When attaching Lift Motor to the Clutch Hub (12), it may be necessary to rotate the motor shaft on the fan gently until the teeth of the hub engage with the plastic toothed star.
9. Ensure that there are spring washers on the Motor Flange Screws and tighten.
10. Connect the Motor Wires using the wiring diagram. Check that the wires are not pinched or obstructed and that they are well sealed where they protrude through the hoist body casing.

Checking the Electric Limit Switches

- Visually check the plastic pins in the chain guide. If the plastic pins are damaged, broken or pinched, replace them.
- Check function of limit switches. If the function is not correct, check the wiring of the limit switches according to wiring diagram.

Safety Clutch

CAUTION!

The sliding clutch is located between the lifting motor and main pinion shaft and transmits the torque. The clutch limits the transmission of torque depending on the setting and prevents overloading of the hoist unit and/or suspension points.

The patented safety clutch acts as an emergency stop if the hook or end stop runs accidentally against the hoist body in top/bottom position. The clutch is designed to act as an emergency limit and must not be used during regular operation of the hoist.

The Safety Clutch is situated just after the motor shaft, before the brake. Even in the case of heavy wear of the clutch lining, the engaged brake will prevent uncontrolled lowering of the load.

WARNING!

To stop the load in case of worn out clutch lining, take fingers off the 'UP'/'DOWN' buttons and the load will be stopped immediately.

Refer to **Diagram 6-18** and **Diagram 6-19**. The Clutch is easily adjustable and accessible. The wear resistant lining material does not require readjustment if the instructions of this manual are followed and the hoist is not overloaded.

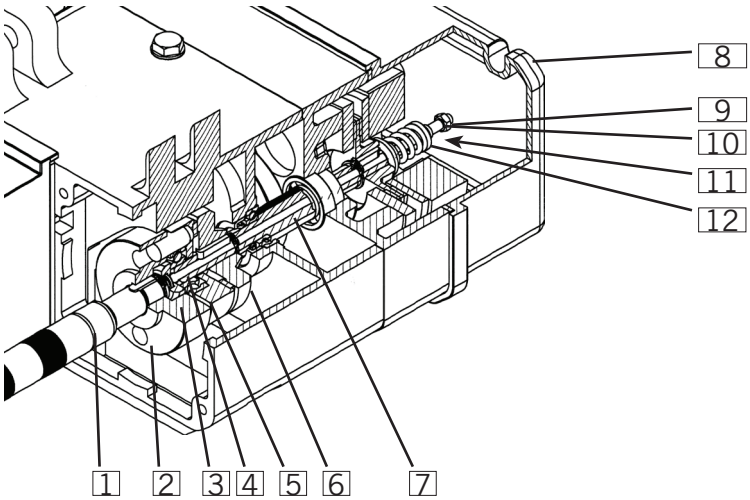

1. Main Motor Shaft
2. Clutch Hub
3. Teeth Ring
4. Bearing
5. Drive Disc with Clutch Liner
6. Clutch Disk
7. Motor Pinion Shaft
8. Gear Cover Cap
9. Self-Locking Nut
10. Tension Rod
11. Adjusting Nut
12. Pressure Spring with Plate

Diagram 6-18. Sliding Clutch Components.

Continued on the next page...

Safety Clutch, Continued

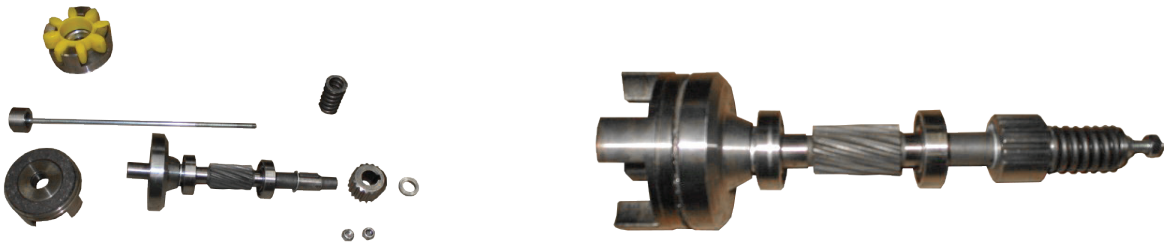

Diagram 6-19. Sliding Clutch Disassembled (l) and Assembled (r).

Safety Clutch Adjustment

CAUTION!

Sliding clutch adjustment should only be completed by trained and qualified personnel.

Refer to **Diagram 6-20** and perform the steps below.

1. Apply the test load = 1.25 times the nominal/rated load onto the load hook.
2. Switch on the chain hoist and check that the test load can be lifted.
3. Lower the test load to the floor.
4. Decrease or increase clutch torque until the test load is just lifted.
5. Adjusting the clutch torque as follows:
   A. Loosen and remove the Brake Side Cap (1).
   B. Use a wrench to hold the retaining self-locking nut (2).
   C. Use a second wrench to loosen/tighten the Self-Locking Nut (3) to compress/decompress the Pressure Spring with Plate (4) until the required test load is just lifted.
   D. Press the control buttons and check operation of the Lift Motor.
   E. Recheck the clutch torque by lifting the test load.
6. Record clutch setting in the inspection and test logbook.
7. Tag the clutch setting.

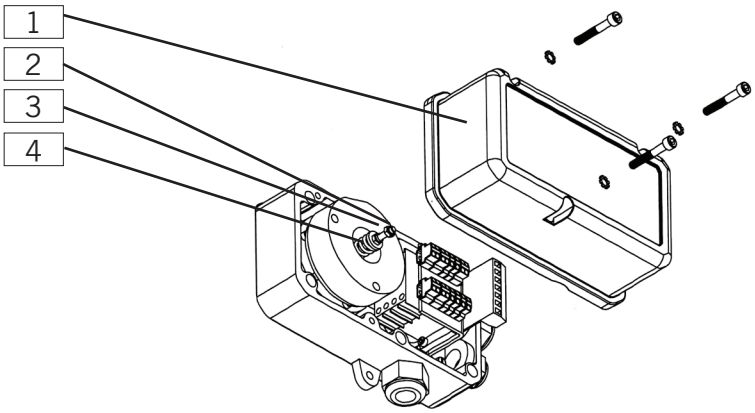

Diagram 6-20. Sliding Clutch Adjustment.

Continued on the next page...

Safety Clutch Adjustment, Continued

CAUTION!

The Safety Clutch is set with a test load by the manufacturer. After changing or replacing the lift motor, it is not necessary to reset the clutch. However, a test with nominal load is required.

The original distance between the end of the tension rod and the coupling pressure plate is marked on a tag on the brake coil.

Checking the Release Limit of the Sliding Clutch During Regular Inspections

The sliding clutch release limit must to be checked by a trained specialist once a year. Check if the hoist lifts the nominal load. The hoist must not lift more than 1.6 x the nominal load. If test loads larger than the nominal load are not available, the release limit can be checked by a clutch testing device. Use such equipment strictly according to its manual.

CAUTION!

Testing the clutch release limit with a Clutch Testing Device must not take the place of performing a load test with a nominal load.

Lubrication

Load Chain Lubrication

CAUTION!

The links along the entire length of the load chain must be lubricated with penetrating gear oil before starting operation for the first time and during operation.

Refer to **Diagram 6-21**.

- To get lubricant into the links, lubricate the chain with no load. Lubricate the shaded areas of the link.
- Lubricate the chain in the chain box.
- Clean chain before repeated lubrication.
- Amount of lubricant and frequency of lubrication may vary due to operating conditions.
- Lubricate chain every 3 months at a minimum.
- Shorten lubrication intervals if necessary.
- Use a dry-film lubricant, e.g. lubricating varnish. Graphite powder, should be used when ambient influences are conducive to wear (sand, emery).

Diagram 6-21. Chain Lubrication.

Continued on the next page...

Load Chain Lubrication, Continued

The following lubricants are recommended for lubrication of chain depending on operating conditions:

Supplier	Lubricant designation
Mobil	Mobilux 150
Mobil	Mobilux EP #0
or equivalent lubricant	

Table 6-5. Recommended Chain Lubricants.

Gear Lubrication

The gear is already filled with oil by the manufacturer. It is a lifetime lubrication, but the oil must be changed if the gear box has to be opened.

If a visible leak occurs from the gear vent, repair it and change the oil to be sure that the correct amount of oil is in the gear box.

CAUTION!

Ensure that waste oil is disposed of in compliance with applicable regulations.

Gear Oil Amounts

Hoist Type from Type Plate	Amount in gal (ml)
031	0.046 (175)

Table 6-6. Oil Amount for GSS Chain Hoist.

In Specification Gear Oil

Supplier	Oil designation
Fuchs	Renolin CLP 220
Castrol	Alpha Zn 200
ESSO	EP 220
Mobil	Mobil gear 630 or SHC 630
Shell	Omala 220
ELF	Reducteif SP 220
BP	XP 220 BP Energol GR

Table 6-7. GSS Chain Hoist In-Spec Gear Oil.

Load Hook Bearing and Chain Sprocket Lubrication

CAUTION!

Lubricate the anti-friction bearings on the hook and the chain sprocket after approximately 20,000 lifting cycles or once a year. If in heavy use, shorten the interval and use a special anti-friction bearing grease.

Supplier	Lubricant designation
Mobil	Mobilux 150
Mobil	Mobilux EP #0
or equivalent lubricant	

Table 6-8. GSS Chain Hoist In-Spec Bearing Lubricant.

Trolley Lubrication

CAUTION!

Trolley Roller Bearings must be lubricated once per year, or sooner if in heavy use.

Supplier	Lubricant designation
Mobil	Mobilux 150
Mobil	Mobilux EP #0
or equivalent lubricant	

Table 6-9. GSS Chain Hoist In-Spec Trolley Lubricant.

This page intentionally left blank.

Section 7 - Troubleshooting

WARNING!

Only trained and qualified personnel should inspect and repair this equipment.

ELECTRICAL SHOCK HAZARD!

Hazardous voltages are present in the electric chain hoist and in connections between components. **Contact with connected electrical circuits may cause death or serious injury.**

Before performing any maintenance work on the equipment, switch off and de-energize the supply of electricity to the equipment. Lockout and tag the supply device in the 'OFF' position. Refer to ANSI Z244.1 Personnel Protection-Lockout/Tag-out of Energy Source s.

Wait at least 10 minutes before opening the device.

Control Boards

Refer to **Diagram 7-1**. There are two control boards for the functions of the GSS Electric Hoist, and they are housed at opposite ends of the hoist. To access the Motor Side Control Board (6), remove the Control Cap (5). To access the Brake Side Control Board, remove the Brake Side Cap.

There are LEDs on the Motor Side Control Board that are used for troubleshooting the hoist, and inspections and voltage readings are taken at various points on the Motor and Brake Side of the hoist.

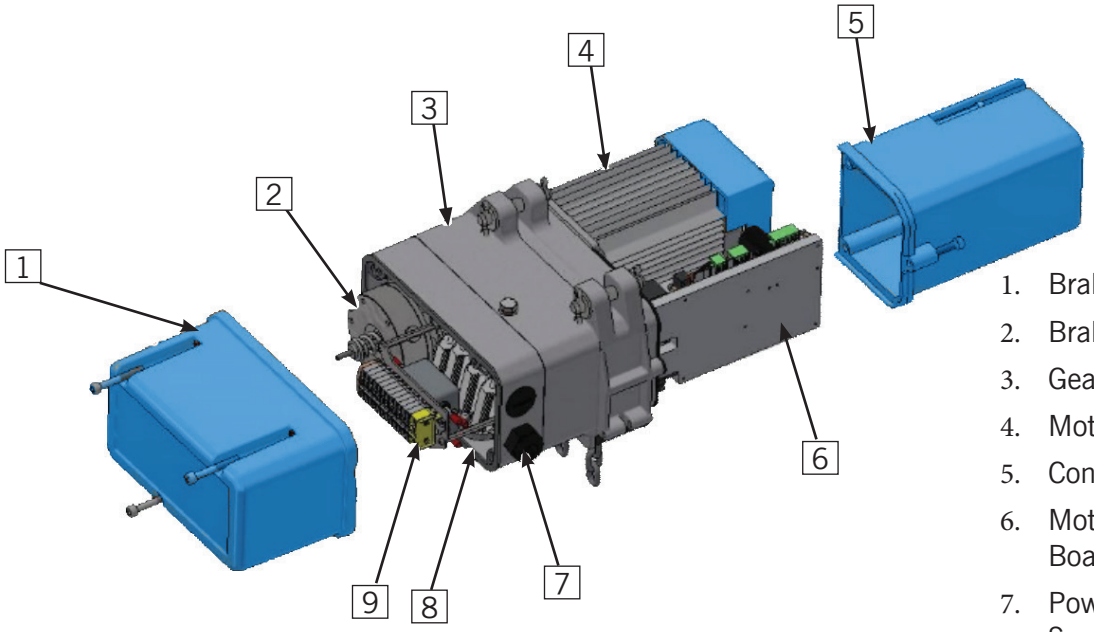

1. Brake Side Cap
2. Brake
3. Gear Housing
4. Motor
5. Control Cap
6. Motor Side Control Board
7. Power Supply Cable Seal
8. Control Cable Seal
9. Brake Side Control Board

Diagram 7-1. GSS Chain Hoist Control Boards.

Continued on the next page...

Control Boards, Continued

After opening the terminal compartment, the following checks must be carried out at the control and in the terminal compartment:

Visual Inspection

- Terminal compartment clean and dry
- No contact erosion, no traces of powder
- Cables routed correctly
- No loose or pinched wires
- No damaged insulation

Motor Side and Brake Side Control Boards

Refer to **Diagram 7-2**. The Motor Side and Brake Side Control Boards contain the following:

1. Brake side terminal block
2. Input power filter
3. Brake Resistors
4. Electric limit switch
5. Control commands/temperature sensor terminal block
6. Input voltage terminal block
7. Brake terminal block
8. Motor terminal block

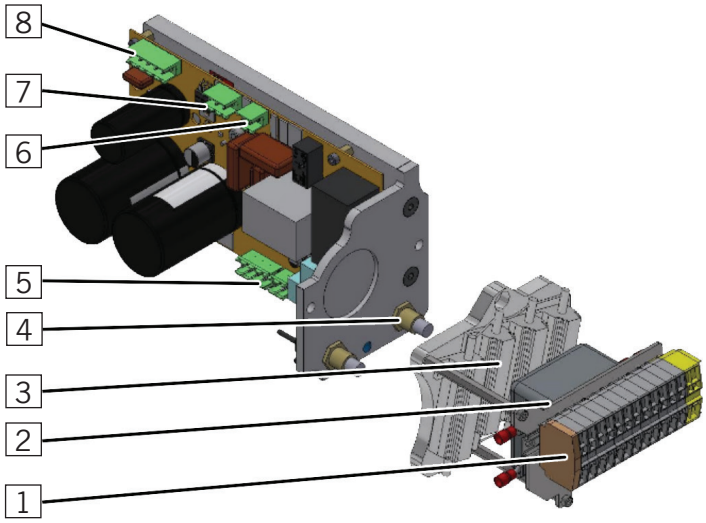

Diagram 7-2. Motor and Brake Side Control Boards.

Replacing the Motor Side Control Board

CAUTION!

The Motor Side Control Board is preset at the factory for 230 VAC. The board must be set for 115 VAC by changing the jumper cable shown in **Diagram 7-3**.

A replacement Motor Side Control Board **MAY** be delivered configured for 230 VAC operation, so it is **critically important to set the board for 115 VAC operation before applying power to the hoist.**

Refer to **Diagram 7-3**. Perform the following:

1. Disconnect the jumper wire from the 230V jack on the Main Control Board (1).
2. Reconnect the wire to the 115V jack (2).
3. Unplug the Brake wire connector (3) and shift the plug from the 230V to the 115V side of the connector. The board is now configured for 115 VAC operation.

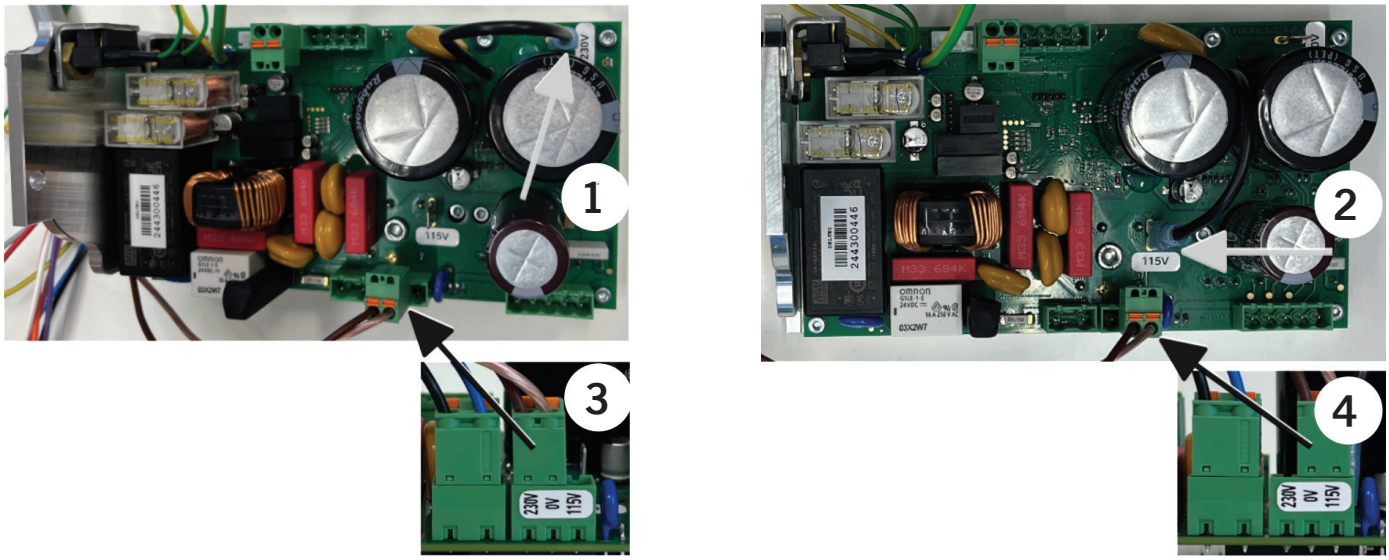

Diagram 7-3. Switching from 230 VAC to 115 VAC.

LEDs for Troubleshooting

Refer to **Diagram 7-4 and Table 7-1**. The Motor Side Control Board has several LEDs that indicate operational state and that can be used for troubleshooting:

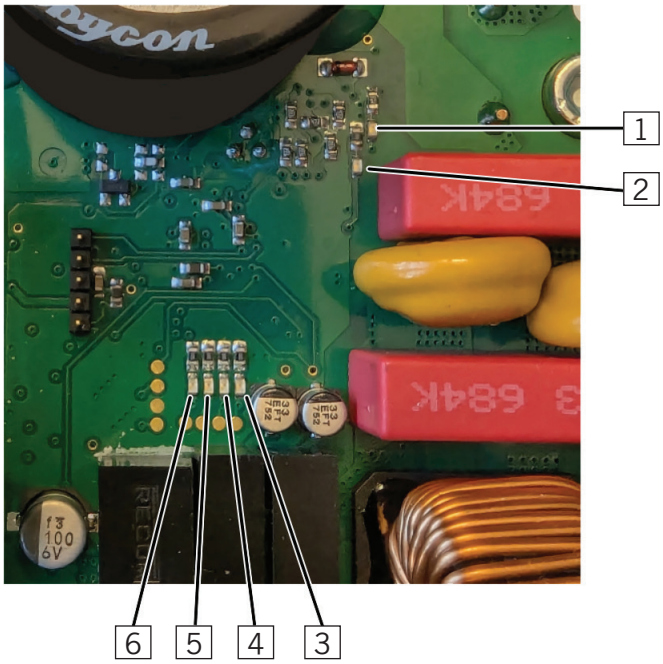

1. LED 15 V
2. LED 5 V
3. LED 1
4. LED 2
5. LED 3
6. LED 4

Diagram 7-4. Motor Side Control Board LEDs.

LED 15 V	LED 5 V	LED 1	LED 2	LED 3	LED 4	Operational State/Fault Analysis
X		X	X	X	X	Status directly after switching on the power supply as long as the EMERGENCY stop is activated.
X	X		X		X	Electric chain hoist is ready for operation. Emergency Stop is deactivated.
X	X			X	X	Electric chain hoist in operation, up or down.
X		X			X	EMERGENCY STOP actuated.
X	X	X	X	X	X	Motor monitor triggered.
X	X					Circuit board control faulty. Replace circuit board control.
Legend: X = LED Lit = LED Not Lit						

Table 7-1. Motor Side Control Board LEDs Indications.

Troubleshooting Table

Refer to **Table 7-2**, which contains additional troubleshooting information for the GSS Hoist. For any unresolved failures, contact Gorbel After the Sale Service at (800) 821-0086.

Symptom	Cause	Remedy
Chain hoist does not operate	Power interruption	Check the main power switch, switches, fuses, the power supply, cables and connections for continuity of all phases.
	Incorrect voltage or frequency	Check the voltage and frequency of the power supply and compare them with the specifications on the type plate of the electric chain hoist. The electric chain hoist is not correctly set to 115 V. Reconnect the cable lug to the circuit board. Connect the brake cable according to the wiring diagram.
	Hoist overloaded, clutch slipping	Reduce the load to nominal, in-spec load.
	Overheated motor with thermal breaker tripped.	Allow the motor to cool. Check and if necessary, adjust the switch frequency of the application.
	High heat working environment. Thermal breaker tripped.	At temperatures above 104°F (40°C), operating time and frequency must be reduced to avoid overloading the motor thermally. Special precautions must be taken to ventilate the electric chain hoist or to shield it from heat.
	Incorrect wiring, loose or broken wires in the electric system of the electric chain hoist	Disconnect the power supply, check the cable connections of the hoist control and pendant control.
	Brake does not release.	Check the resistance of the brake coil. Replace the brake as necessary.
	EMERGENCY STOP pressed on control pendant.	Turn the EMERGENCY STOP button clockwise to unlock the control.
	Motor burned out.	Replace the motor and all damaged parts.
Main PCB Only 15VLED and 5VLED illuminated	Micro-controller cannot be reached.	Replace circuit board.
Main PCB 15VLED, LED1 and LED4 illuminated, 5VLED is off.	Emergency stop is active.	After checking and eliminating the cause, clear the EMERGENCY STOP by turning the button to the right.
Only LED1 – LED4 illuminated	Error state	Indicates control voltage is not present on the Main Control Board. Check the wiring according to the wiring diagram.
Load moves in the wrong direction	Control pendant incorrectly connected.	Motor incorrectly connected.
	Incorrect electrical wiring	Check the wiring according to the wiring diagram.

Table 7-2. Chain Hoist Troubleshooting.

Continued on the next page...

Troubleshooting Table, Continued

Symptom	Cause	Remedy
Brake does not open	Brake overheated	Check the brake gap. Check the brake coil and brake cables. Replace if required.
Chain hoist lifts but does not lower	Incorrect operating mode (jog mode, switch operations per hour)	Check the lowering limit switch.
	Cable/wire breakage in the control cable	Check the passage of each wire in the cable. If a wire is broken, replace the entire control cable
	Faulty switch inserts in the pendant control	Check electrical continuity. Check electrical connections. Replace defective parts.
	Chain jammed	Verify that the chain can enter the chain box smoothly. Check whether the chain is knotted, and remove knots. Replace the chain and chain guide in case of visible damage.
Chain hoist lowers but does not lift	Hoist overloaded, clutch slipping	Reduce the load to nominal, in-spec load.
	Incorrect operating mode (jog mode, switch operations per hour)	Check the circuit for broken contacts. Check the lift limit switch.
	Cable/wire breakage in the control cable	Check the passage of each wire in the cable. If a wire is broken, replace the entire control cable.
	Faulty switch inserts in the pendant control	Check the electrical continuity. Check the electrical connections. Replace defective parts.
	Worn slip clutch	Check the clutch setting or replace the clutch.
	Chain jammed	Verify that the chain can enter the chain box smoothly. Check whether the chain is knotted, and remove knots. Replace the chain and chain guide in case of visible damage.
Chain hoist does not lift in-spec load, or lifts at a different speed	Hoist overloaded, clutch slipping	Reduce the load to nominal, in-spec load.
	Under-voltage in the hoist power supply	Determine the cause of the under-voltage and adjust the voltage to that specified on the type plate. Measure the voltage at the input terminals of the electric chain hoist.
	Worn slip clutch	Check the clutch setting or replace the clutch.
	Chain jammed	Verify that the chain can enter the chain box smoothly. Check whether the chain is knotted, and remove knots. Replace the chain and chain guide in case of visible damage.

Table 7-2, Continued. Chain Hoist Troubleshooting.

Continued on the next page...

Symptom	Cause	Remedy
Too much trailing distance when stopping	Brake worn	Check the brake air gap. Replace the brake if necessary.
	Hoist overloaded	Reduce the load to nominal, in-spec load.
Hoist movement is jerky, with intermittent failures	Loose contact in the circuit	Check all cables and connecting terminals for poor connections. Replace if required.
	Faulty limit switch contact	Check and measure the limit switch. Check the mechanical function of the limit switch tappets. Replace the limit switch if required.
	Defective cable or wire breakage in the pendant control	Check the wiring of the pendant control for interruptions/faults. Replace the entire pendant control if the interruptions cannot be resolved

Table 7-2, Continued. Chain Hoist Troubleshooting.

This page intentionally left blank.

Limited Warranty

It is agreed that the equipment purchased hereunder is subject to the following LIMITED warranty and no other. Gorbel Incorporated ("Gorbel") warrants the manual push-pull Work Station Cranes, Jib Crane, Gantry Crane, and Tether Track® products to be free from defects in material or workmanship for a period of ten years or 20,000 hours use from date of shipment. Gorbel warrants the Motorized Work Station Cranes and Jib Crane products to be free from defects in material or workmanship for a period of two years or 4,000 hours use from the date of shipment. Gorbel warrants the G-Force® and Easy Arm® products to be free from defects in material or workmanship for a period of one year or 2,000 hours use from the date of shipment. This warranty does not cover Gantry Crane wheels. This warranty shall not cover failure or defective operation caused by operation in excess of recommended capacities, misuses, negligence or accident, and alteration or repair not authorized by Gorbel. No system shall be field modified after manufacture without the written authorization of Gorbel, Inc. Any field modification made to the system without the written authorization of Gorbel, Inc. shall void Gorbel's warranty obligation. OTHER THAN AS SET FORTH HEREIN, NO OTHER EXPRESS WARRANTIES, AND NO IMPLIED WARRANTIES, ORAL OR WRITTEN, INCLUDING BUT NOT LIMITED TO THE WARRANTIES OF MERCHANTABILITY OR FITNESS FOR A PARTICULAR PURPOSE, ARE MADE BY GORBEL WITH RESPECT TO ITS PRODUCTS AND ALL SUCH WARRANTIES ARE HEREBY SPECIFICALLY DISCLAIMED. GORBEL SHALL NOT BE LIABLE UNDER ANY CIRCUMSTANCES FOR ANY INCIDENTAL, SPECIAL AND/OR CONSEQUENTIAL DAMAGES WHATSOEVER, WHETHER OR NOT FORESEEABLE, INCLUDING BUT NOT LIMITED TO DAMAGES FOR LOST PROFITS AND ALL SUCH INCIDENTAL, SPECIAL AND/OR CONSEQUENTIAL DAMAGES ARE HEREBY ALSO SPECIFICALLY DISCLAIMED. Gorbel's obligation and Purchaser's or end user's sole remedy under this warranty is limited to the replacement or repair of Gorbel's products at the factory, or at the discretion of Gorbel, at a location designated by Gorbel. Purchaser or end user shall be solely responsible for all freight and transportation costs incurred in connection with any warranty work provided by Gorbel hereunder. Gorbel will not be liable for any loss, injury or damage to persons or property, nor for damages of any kind resulting from failure or defective operation of any materials or equipment furnished hereunder. Components and accessories not manufactured by Gorbel are not included in this warranty. Purchaser's or end user's remedy for components and accessories not manufactured by Gorbel is limited to and determined by the terms and conditions of the warranty provided by the respective manufacturers of such components and accessories.

A. DISCLAIMER OF IMPLIED WARRANTY OF MERCHANTABILITY

Gorbel and Purchaser agree that the implied warranty of merchantability is excluded from this transaction and shall not apply to the goods involved in this transaction.

B. DISCLAIMER OF IMPLIED WARRANTY OF FITNESS FOR PARTICULAR PURPOSE

Gorbel and Purchaser agree that the implied warranty of fitness for particular purpose is excluded from this transaction and shall not apply to the goods involved in this transaction.

C. DISCLAIMER OF EXPRESS WARRANTY

Gorbel's agents, or dealer's agents, or distributor's agents may have made oral statements about the machinery and equipment described in this transaction. Such statements do not constitute warranties, and Purchaser agrees not to rely on such statements. Purchaser also agrees that such statements are not part of this transaction.

D. DISCLAIMER OF SPECIAL, INCIDENTAL AND CONSEQUENTIAL DAMAGES

Gorbel and Purchaser agree that any claim made by Purchaser which is inconsistent with Gorbel's obligations and the warranty remedies provided with Gorbel's products, and in particular, special, incidental and consequential damages, are expressly excluded.

E. DEALER OR DISTRIBUTOR NOT AN AGENT

Gorbel and Purchaser agree that Purchaser has been put on notice that dealer or distributor is not Gorbel's agent in any respect for any reason. Gorbel and Purchaser also agree that Purchaser has been put on notice that dealer or distributor is not authorized to incur any obligations or to make any representations or warranties on Gorbel's behalf other than those specifically set forth in Gorbel's warranty provided in connection with its product.

F. MERGER

This warranty agreement constitutes a final and complete written expression of all the terms and conditions of this warranty and is a complete and exclusive statement of those terms.

G. PAINTING

Every crane (excluding components) receives a quality paint job before leaving the factory. Unfortunately, no paint will protect against the abuses received during the transportation process via common carrier. We have included at least one (1) twelve ounce spray can for touch-up with each crane ordered (unless special paint was specified). If additional paint is required, contact a Gorbel® Customer Service Representative at 1-800-821-0086 or 1-585-924-6262.

Title and Ownership:

Title to the machinery and equipment described in the foregoing proposal shall remain with Gorbel and shall not pass to the Purchaser until the full amount herein agreed to be paid has been fully paid in cash.

Claims and Damages:

Unless expressly stated in writing, goods and equipment shall be at Purchaser's risk on and after Seller's delivery in good shipping order to the Carrier. Gorbel shall in no event be held responsible for materials furnished or work performed by any person other than it or its authorized representative or agent.

Cancellations:

If it becomes necessary for the purchaser to cancel this order wholly or in part, he shall at once so advise Gorbel in writing. Upon receipt of such written notice all work will stop immediately. If the order entails only stock items, a flat restocking charge of 15% of the purchase price will become due and payable by Purchaser to Gorbel. Items purchased specifically for the canceled order shall be charged for in accordance with the cancellation charges of our supplier plus 15% for handling in our factory. The cost of material and/or labor expended in general fabrication for the order shall be charged for on the basis of total costs to Gorbel up to the time of cancellation plus 15%.

Returns:

No equipment, materials or parts may be returned to Gorbel without express permission in writing to do so.

Extra Charge Delay:

If Purchaser delays or interrupts progress of Seller's performance, or causes changes to be made, Purchaser agrees to reimburse Gorbel for expense, if any, incident to such delay.

Changes and Alterations:

Gorbel reserves the right to make changes in the details of construction of the equipment, as in its judgment, will be in the interest of the Purchaser; will make any changes in or additions to the equipment which may be agreed upon in writing by the Purchaser; and Gorbel is not obligated to make such changes in products previously sold any customer.

Third Party Action:

Should Gorbel have to resort to third party action to collect any amount due after thirty (30) days from date of invoice, the Purchaser agrees to pay collection costs, reasonable attorney's fees, court costs and legal interest.

OSHA Responsibilities:

Gorbel agrees to fully cooperate with Purchaser in the design, manufacture or procurement of safety features or devices that comply with OSHA regulations. In the event additional equipment or labor shall be furnished by Gorbel, it will be at prices and standard rates then in effect, or as may be mutually agreed upon at the time of the additional installation.

Equal Employment Opportunity:

Gorbel agrees to take affirmative action to ensure equal employment opportunity for all job applicants and employees without regard to race, color, age, religion, sex, national origin, handicap, veteran, or marital status. Gorbel agrees to maintain non-segregated work facilities and comply with rules and regulations of the Secretary of Labor or as otherwise provided by law or Executive Order.

This page intentionally left blank.

GORBEL®
A CLASS ABOVE

600 Fishers Run, P.O. Box 593
Fishers, NY 14453-0593
Phone: (800) 821-0086
Fax: (800) 828-1808
E-Mail: info@gorbel.com
http://www.gorbel.com

© 2025 Gorbel Inc. All Rights Reserved

linkedin.com/company/gorbel
Facebook.com/gorbelinc
youtube.com/gorbelmarketing
instagram.com/gorbelinc
gorbel.com/blog