GORBEL®
A CLASS ABOVE

# Gorbel® Electric Chain Hoist

## Installation, Operation & Maintenance Manual

Part Number: MAN-US012-R01 Released 1/2026
Find manual updates at:
https://www.gorbel.com/service-support/archived-installation-manuals

Scan to Register
Your Warranty

**Rated Loads**
**1/8 Ton through 5 Ton**

Follow all instructions and warnings for installing, operating, inspecting and maintaining this electric chain hoist.

Gorbel Customer Order No. / Serial No. _____

Gorbel Dealer _____

# TABLE OF CONTENTS

Section 1 - Warnings and Important Information ..... 1
1.1 Introduction ..... 1
1.2 Terms ..... 1
1.3 General ..... 1
1.4 Warning Tags ..... 2
1.5 Short User Guide ..... 3
1.6 Electrical/Design Standards ..... 3

Section 2 - Technical Information ..... 4
2.1 Technical Overview ..... 4
2.2 Load Chain Configuration ..... 4
2.3 Model Number Description ..... 5
2.4 Type Plate ..... 5
2.5 Operating Conditions ..... 6
2.6 Hoist Dimensions ..... 6
2.7 Wiring Diagrams ..... 7

Section 3 - Delivery, Transportation and Storage ..... 13
3.1 Delivery ..... 13
3.2 Transport ..... 13
3.3 Storage ..... 13

Section 4 - Installation ..... 14
4.1 Qualification of Installation Workers ..... 14
4.2 General ..... 14
4.3 Unpacking the Hoist ..... 15
4.4 Inspection Before Assembly ..... 16
4.5 Assembly ..... 17
4.6 Electrical Connection ..... 22
4.7 Inspection Before Initial Operation ..... 29

Section 5 - Operation ..... 30
5.1 Hoist Operator Qualification ..... 30
5.2 Dos and Don’ts for Operation ..... 30
5.3 Installation, Service and Operation (General) ..... 32
5.4 Inspection Before Starting Work ..... 32
5.5 Operation ..... 32

Section 6 - Maintenance ..... 34
6.1 Maintenance Schedule ..... 34
6.2 Load and Suspension Hooks ..... 34
6.3 Load Chain, Chain Guide and Hold Down ..... 36
6.4 Lift Limiter ..... 40
6.5 Chain Container ..... 40
6.6 Brake ..... 41
6.7 Motor ..... 43
6.8 Safety Clutch ..... 45
6.9 Lubrication ..... 47

Section 7 - Troubleshooting ..... 49

Section 8 - Spare Parts ..... 51

Section 9 - Disassembly and Proper Care ..... 52

Limited Warranty ..... 53

# SECTION 1 - WARNINGS AND IMPORTANT INFORMATION

## 1.1 Introduction

This manual contains important information for installation, operation and maintenance of your Gorbel® hoist. It is strongly recommended that you read and understand this manual prior to installing, operating or maintaining your hoist.

## 1.2 Terms

The following signal words and signs are used in this manual to highlight hazardous situations.

| | |
|---|---|
| **CAUTION!** | Caution indicates a potentially hazardous situation, which may result in minor or moderate injury or property damage. |
| **WARNING!** | Warning indicates a hazardous situation, which could result in serious injury or death and property damage. |
| **HAZARD!** | Hazard indicates a hazardous situation, which will result in serious injury or death and property damage. |
| **ELECTRICAL SHOCK HAZARD!** | Electrical hazard indicates a hazardous situation, which will result in serious injury or death and property damage. |
| **HEAT HAZARD!** | Heat hazard indicates a hazardous situation, which will result in serious injury or death and property damage. |

## 1.3 General

| | |
|---|---|
| **WARNING!** | Read all instructions first before installing or operating the equipment. |
| **WARNING!** | The use of any electric chain hoist presents some risk of personal injury or property damage. That risk is significantly increased if instructions and warnings are not properly followed. Before using this hoist, each operator should become thoroughly familiar with all warnings, instructions and recommendations in this manual. Retain this manual for future reference and use. |
| **WARNING!** | Forward this manual to the hoist operator. Failure to operate the hoist as directed in the manual may cause injury. |

## 1.4 Warning Tags

The warning tag shown below is supplied with the electric chain hoist by the manufacturer. If the tag is not attached to the control pendant cable of the hoist, order a replacement tag from the manufacturer or dealer and install it on the control pendant of the hoist.

**WARNING!** Read and obey all warnings attached to the electric chain hoist.

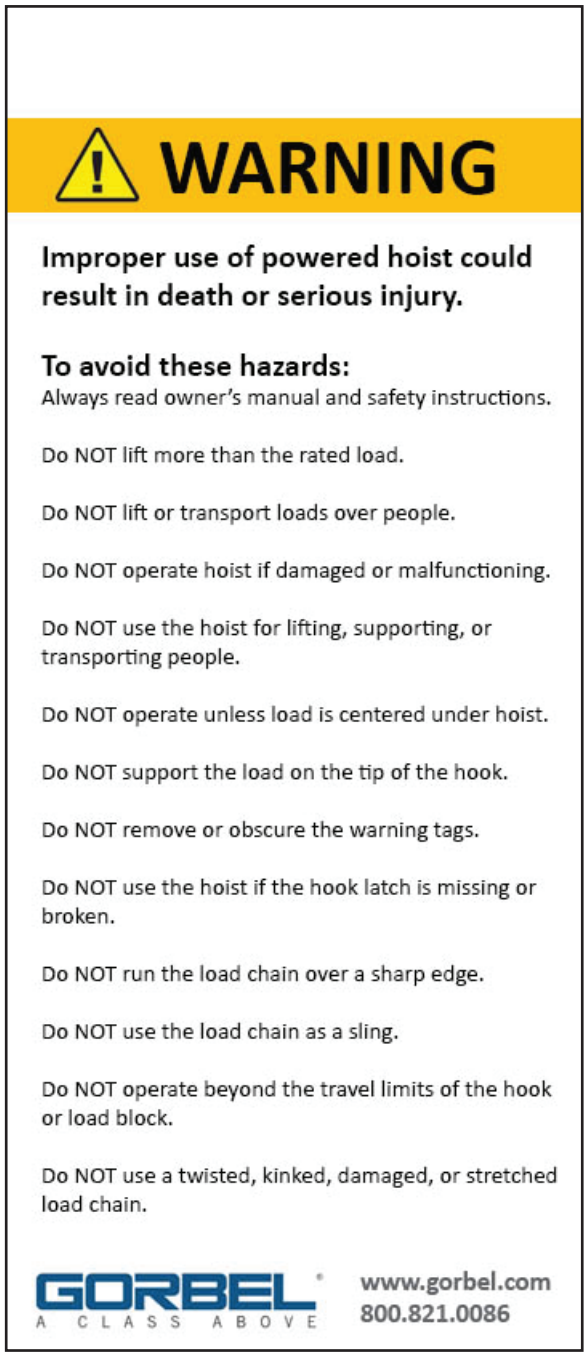


**Figure 1:** Warning tag on the control cable.

## 1.5 Short User Guide

**CAUTION!** This short user guide is fitted to each hoist unit and has to be read before use.

**Figure 2:** Short user guide.

## 1.6 Electrical/Design Standards

**NOTICE:** Each Gorbel® Electric Chain Hoist is built in accordance with the specifications contained herein and at the time of manufacture complied with our interpretation of applicable sections of the American Society of Mechanical Engineers Code B30.16 “Overhead Hoists”, the National Electrical Code (ANSI/NFPA 70) and the Occupational Safety and Health Act. Since OSHA states the National Electrical Code applies to all electric hoists, installers are required to provide current overload protection and grounding (on the branch circuit section) in keeping with the code. Check each installation for compliance with the application, operation and maintenance sections of these articles.

# SECTION 2 - TECHNICAL INFORMATION

## 2.1 Technical Overview

The following signal words and signs are used in this manual to highlight hazardous situations.

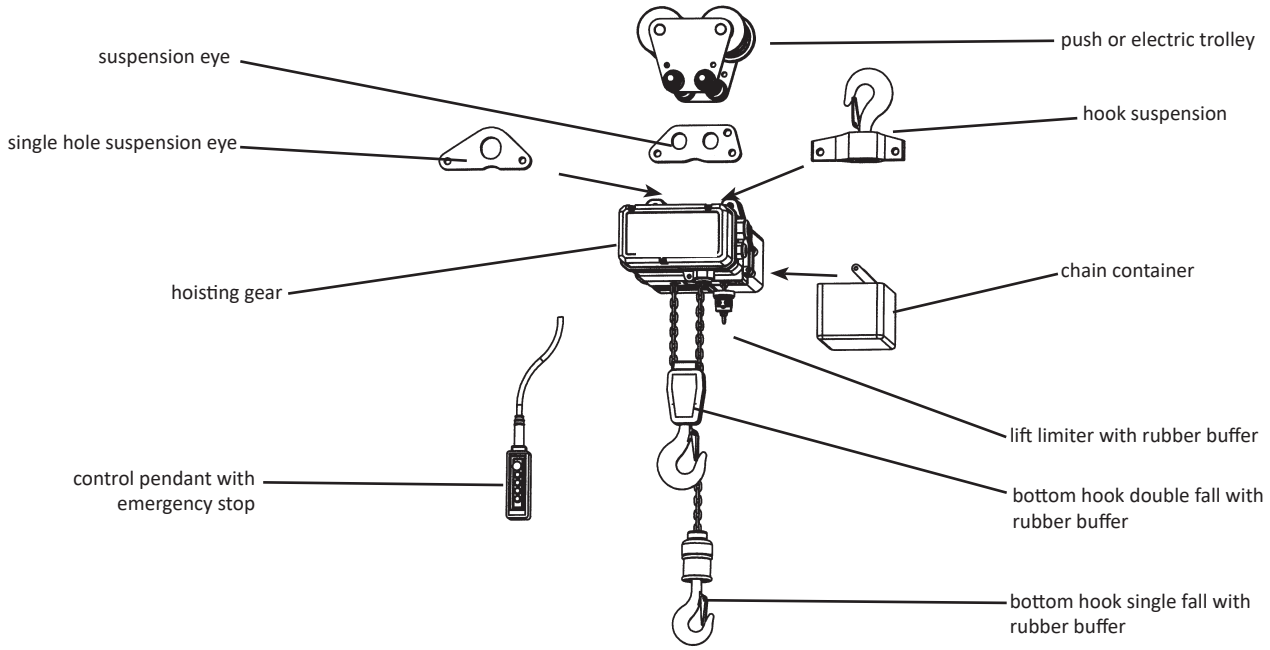


**Figure 3:** Electric chain hoist and its accessories.

## 2.2 Load Chain Configuration

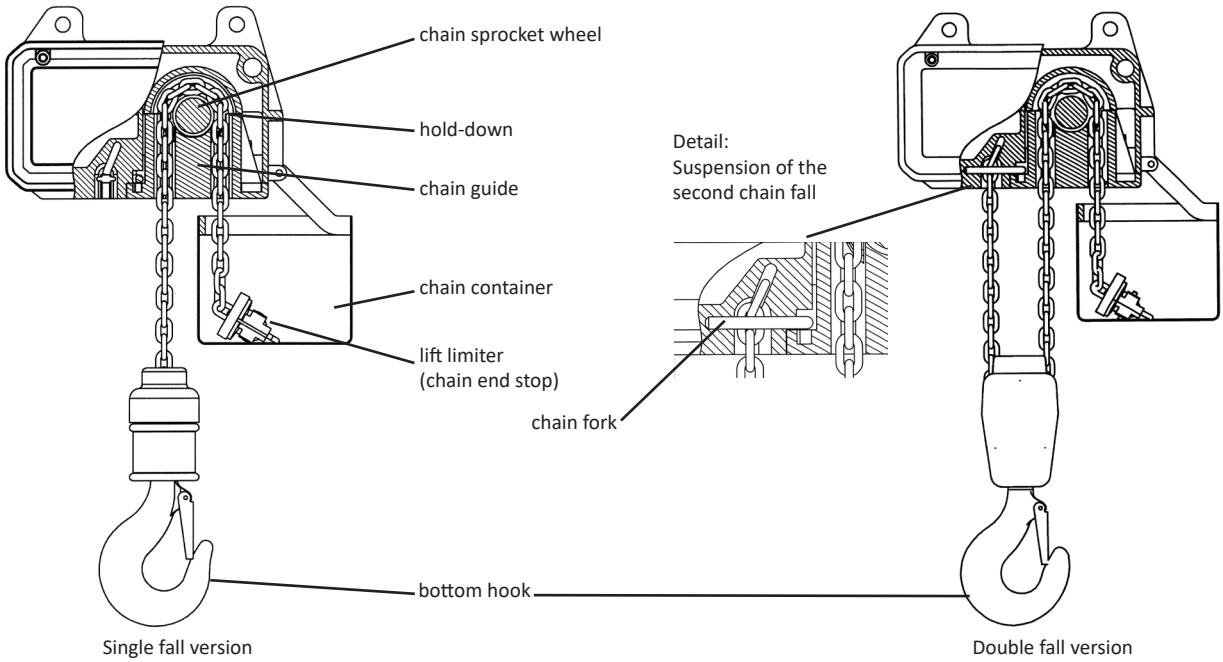


**Figure 4:** Load chain configuration

## 2.3 Model Number Description

**GECH - 1/8 - D - 32/8 - RH - 460 - 10 - 1 - C**
[1] [2] [3] [4] [5] [6] [7] [8]

[1] Capacity in Tons (1/8, 1/4, 1/2, 1, 1 1/2, 2, 3, 4, 5)
[2] Hoist Control Speed ((S)ingle, (D)ual)
[3] Hoisting Speed (Published)
[4] Suspension ((SSP) Single Hole Suspension Plate, (DSP) Double Hole Suspension Plate, (RH) Rigid Hook)
[5] Voltage (115, 230, 460, 575)
[6] Lift Height (10, 15, 20)
[7] Number of Falls (1, 2)
[8] Chain Container ((C)anvas, (P)lastic)

## 2.4 Type Plate

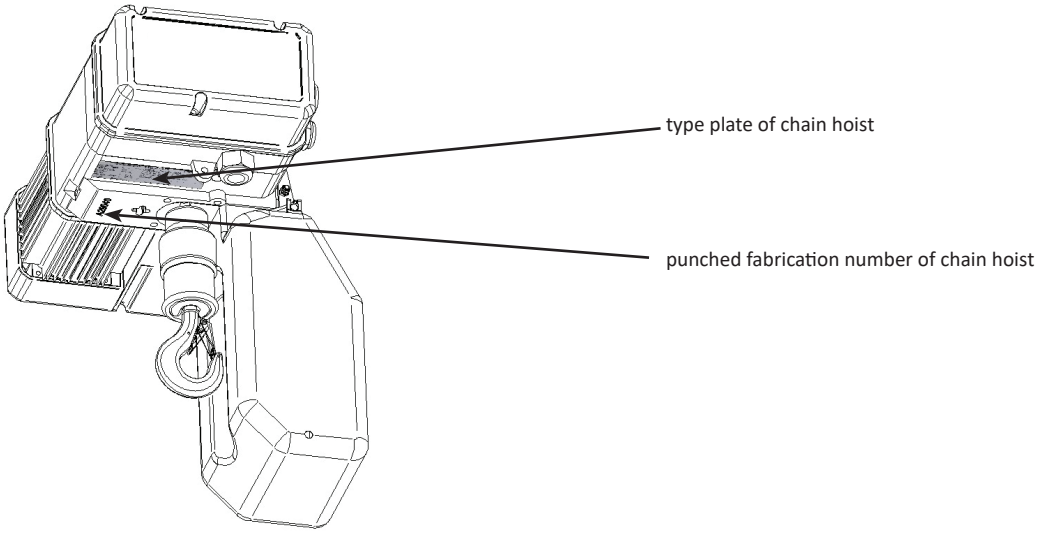


**Figure 5:** Identification of chain hoist.

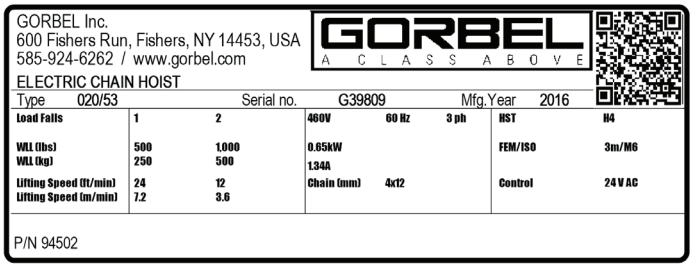


**Figure 6:** Type plate.

| Number | Description |
|---|---|
| 1 | Manufacturer's address; machine type |
| 2 | Type; fabrication number; year of fabrication |
| 3 | Technical and electrical data |
| 4 | Certification number; regulation |

**Table 1:** Description of the type plate

## 2.5 Operating Conditions

- **Temperature range -4°F to +104°F (-20°C to +40°C)**
- **Humidity 85% or less**
- **Operating height up to 3300 ft (1000 m) above sea level**
- **Insulation class F**
- **Protection class IP55**
- **Duty cycle rating H3 and H4**

**CAUTION!** If your operating conditions fall outside of the ranges listed here, please contact Gorbel to make sure your hoist can be used without causing potential damage to the hoist or creating an unsafe situation for the hoist operator.

## 2.6 Hoist Dimensions

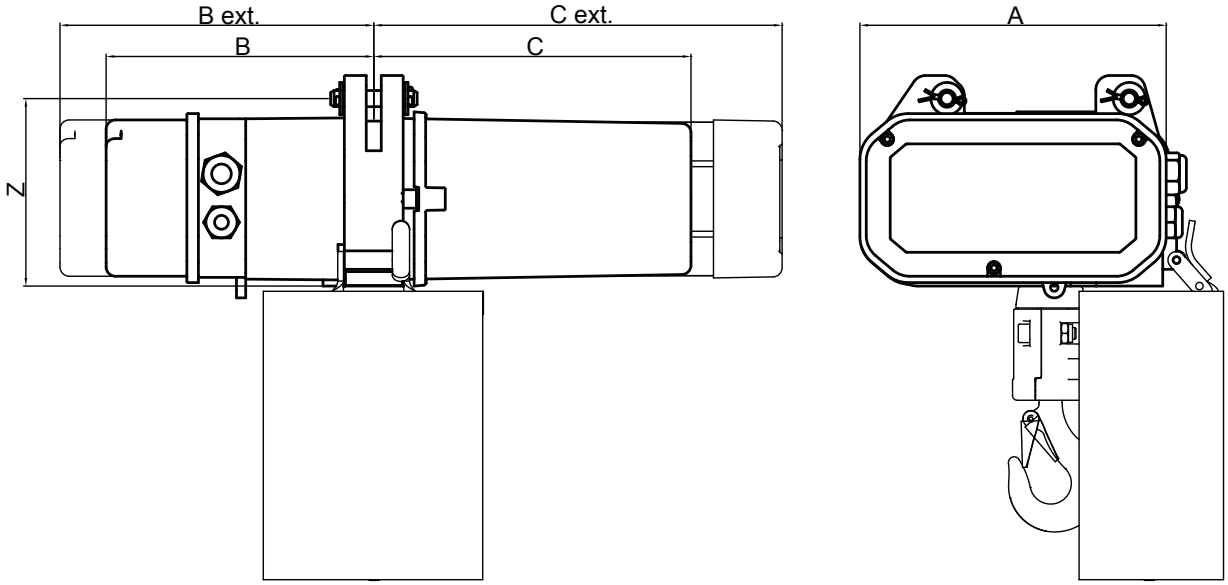


**Figure 7:** Hoist dimensions.

| Gorbel Hoist Type | Chain Dimension (mm x mm) | A in (mm) | B in (mm) | B ext.[1] in (mm) | C in (mm) | C ext.[1] in(mm) | Z in (mm) |
|---|---|---|---|---|---|---|---|
| 020/01, 020/53, 020/57 | 4 x 12 | 8.4 (212) | 7.6 (192) | | 8.7 (220) | | 5.4 (137) |
| 021/51, 021/53 | 4 x 12 | 8.4 (212) | 7.6 (192) | | 8.7 (220) | | 5.4 (137) |
| 030/54 | 5.2 x 15 | 8.4 (212) | 7.6 (192) | | 8.7 (220) | | 5.4 (137) |
| 050/02 | 5.2 x 15 | 10.5 (266) | 9.2 (232) | | 10.8 (274) | | 6.5 (163) |
| 070/51, 070/61 | 7.2 x 21 | 10.5 (266) | 9.2 (232) | | 10.8 (274) | | 6.7 (168) |
| 071/54, 071/55, 071/58 | 7.2 x 21 | 10.5 (266) | 9.2 (232) | | 10.8 (274) | 14.0 (354) | 6.7 (168) |
| 090/55 | 9 x 27 | 14.1 (358) | 11.2 (283) | | 14.3 (362) | | 8.6 (217) |
| 091/51, 091/59 | 9 x 27 | 14.1 (358) | 11.2 (283) | 13.4 (338) | 14.3 (362) | 16.3 (412) | 8.6 (217) |
| 110/52 | 11.3 x 31 | 14.1 (358) | 11.5 (291) | | 14.5 (366) | | 9.4 (237) |
| 111/52, 111/56 | 11.3 x 31 | 14.1 (358) | 11.5 (291) | | 16.4 (416) | | 9.4 (237) |

[1] Hoists with extended motor

**Table 2:** Main dimensions (for a selected number of hoists).

## 2.7 Wiring Diagrams

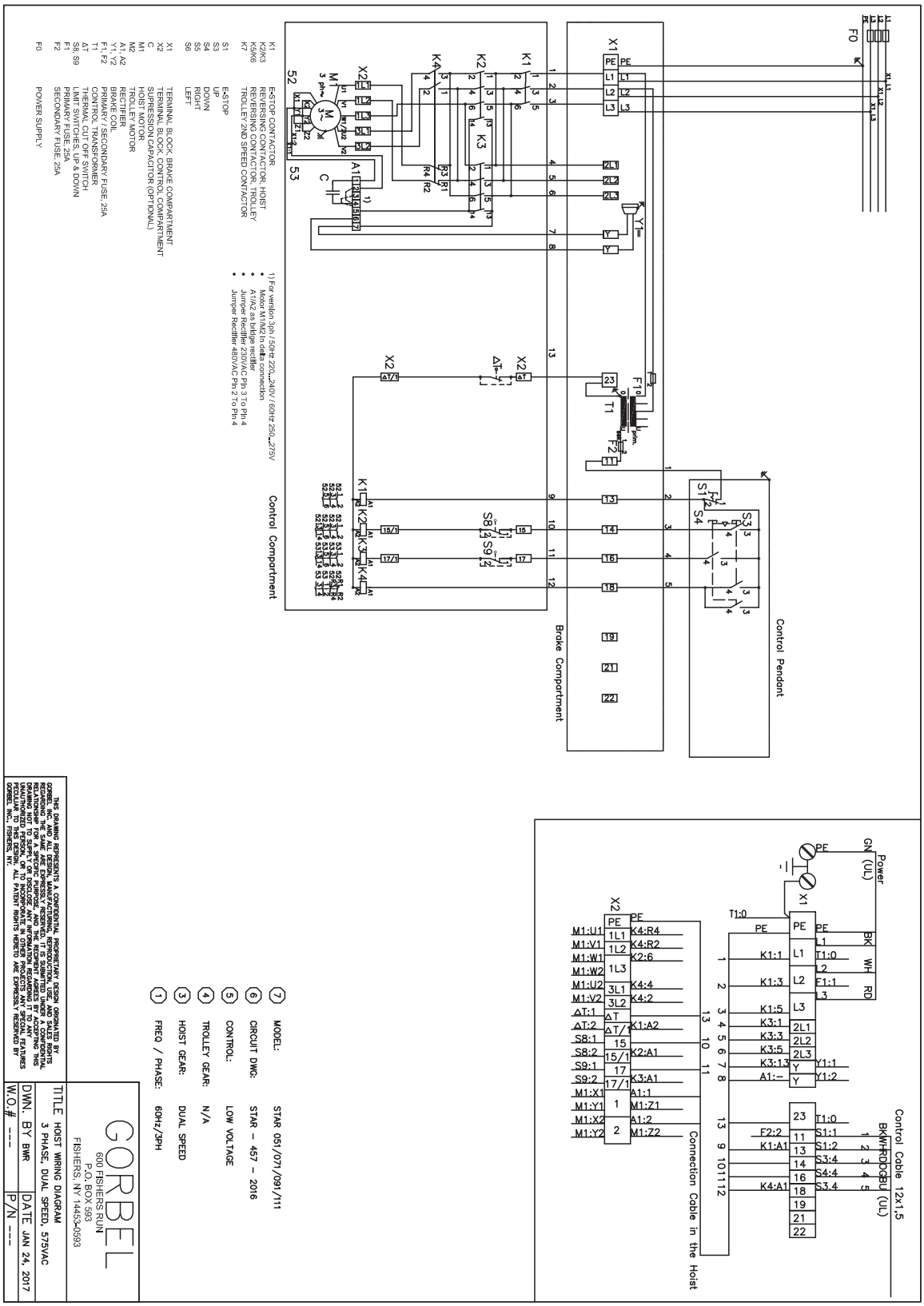


**Figure 8:** Wiring diagram - 3 phase, dual speed, 575 VAC.

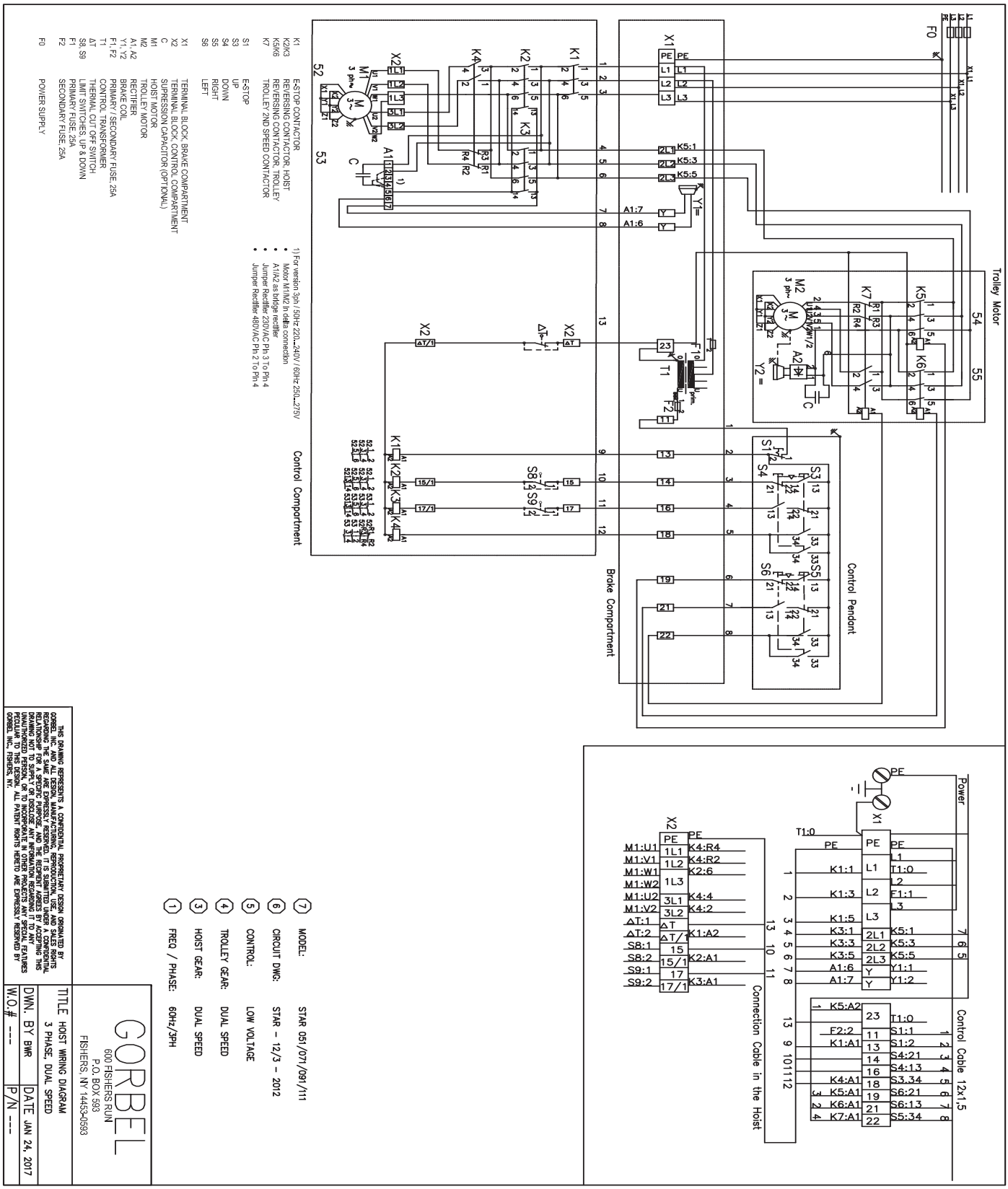


**Figure 9 - Wiring diagram - 3 phase, dual speed.**

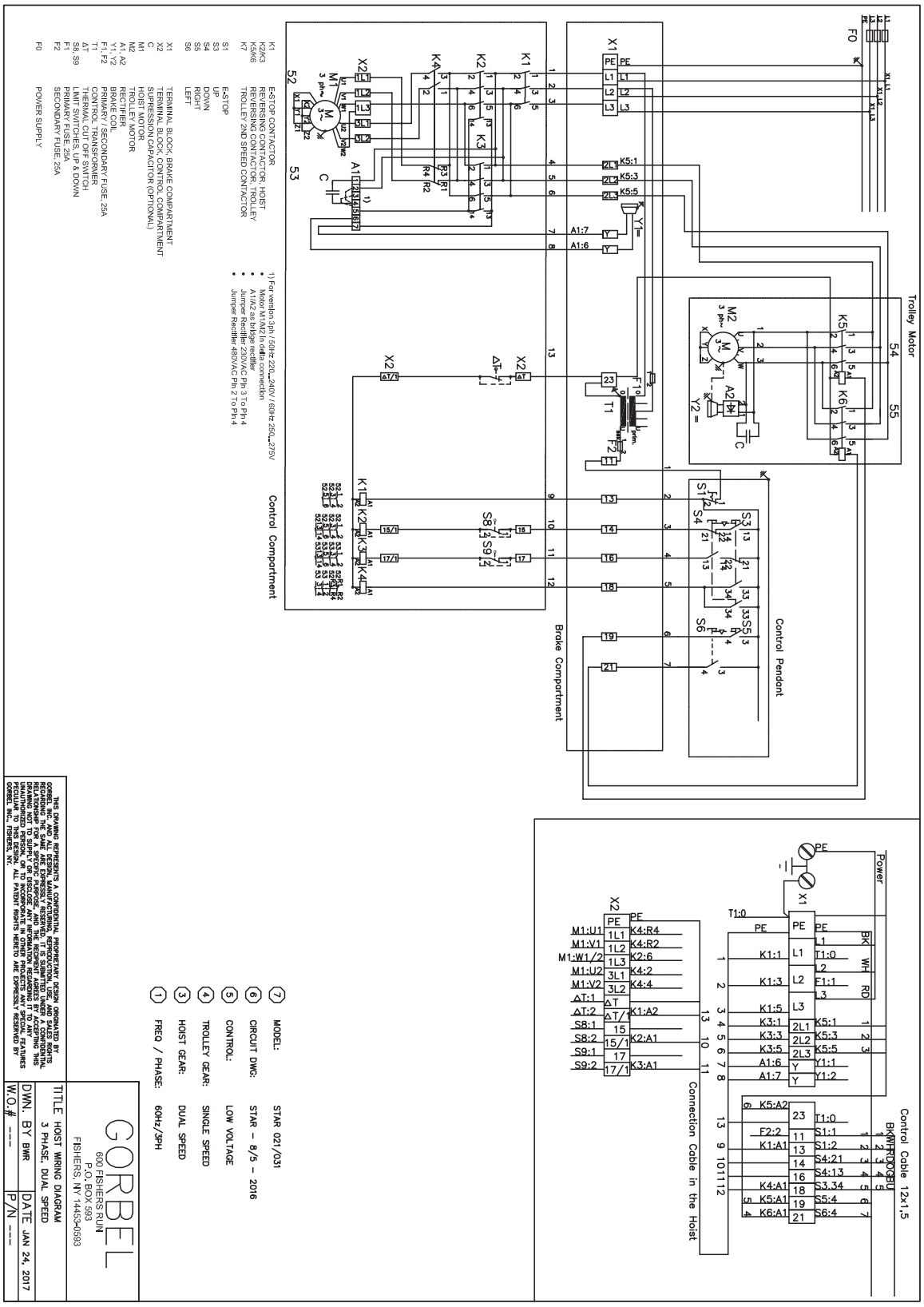


**Figure 10:** Wiring diagram - 3 phase, dual speed

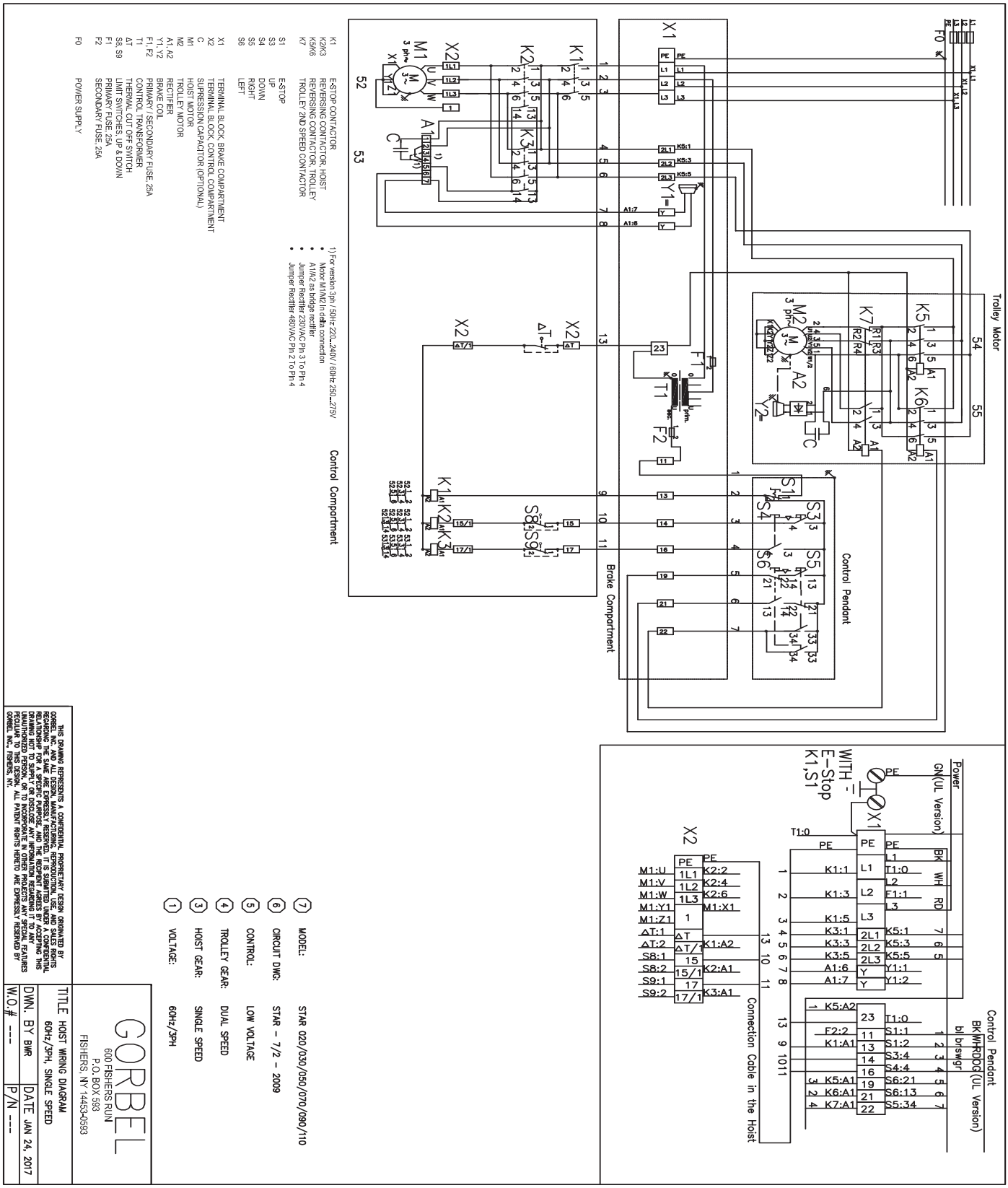


**Figure 11 - Wiring diagram - 60Hz, 3 phase, single speed.**

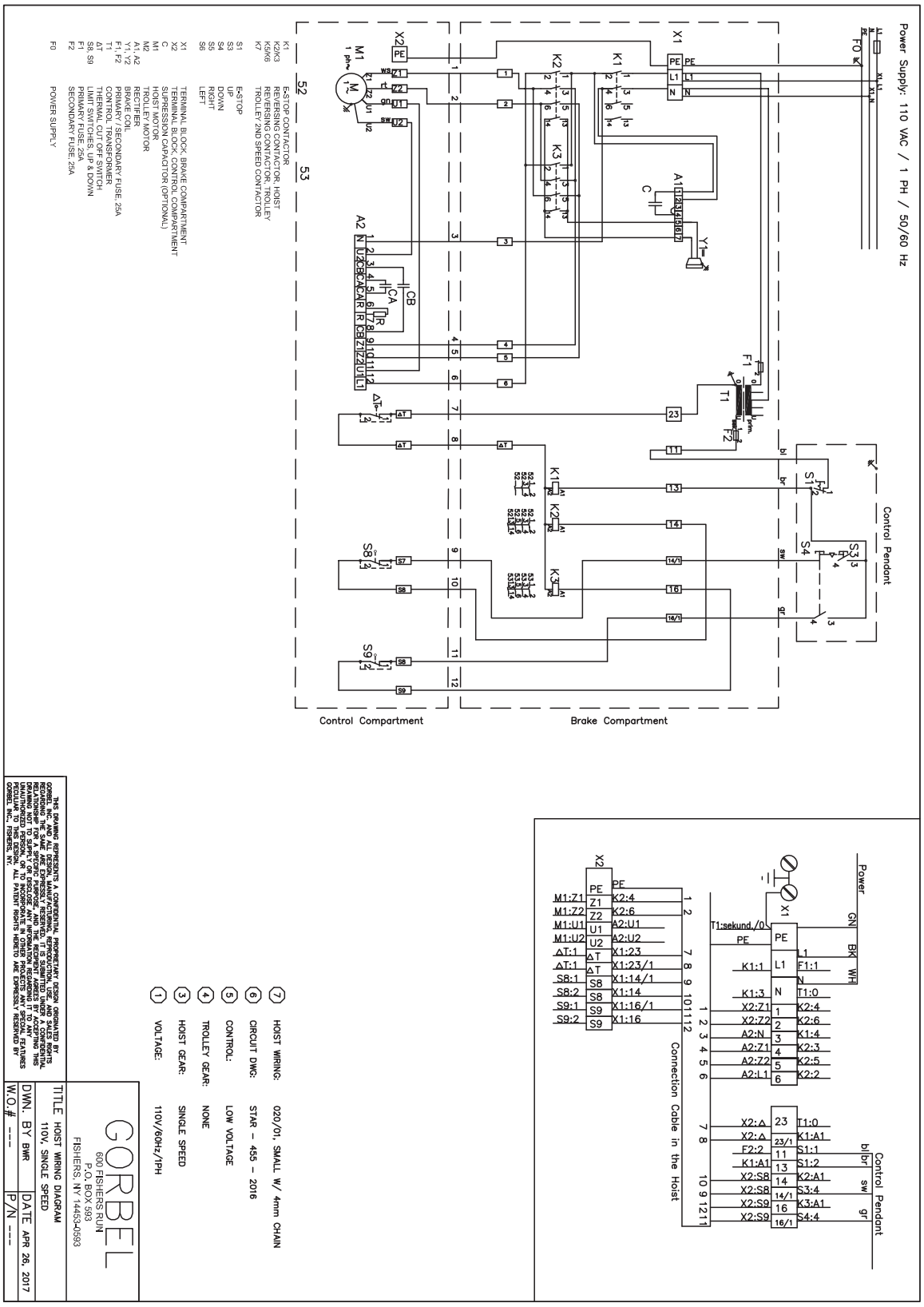


**Figure 12:** Wiring diagram - 110V, single speed

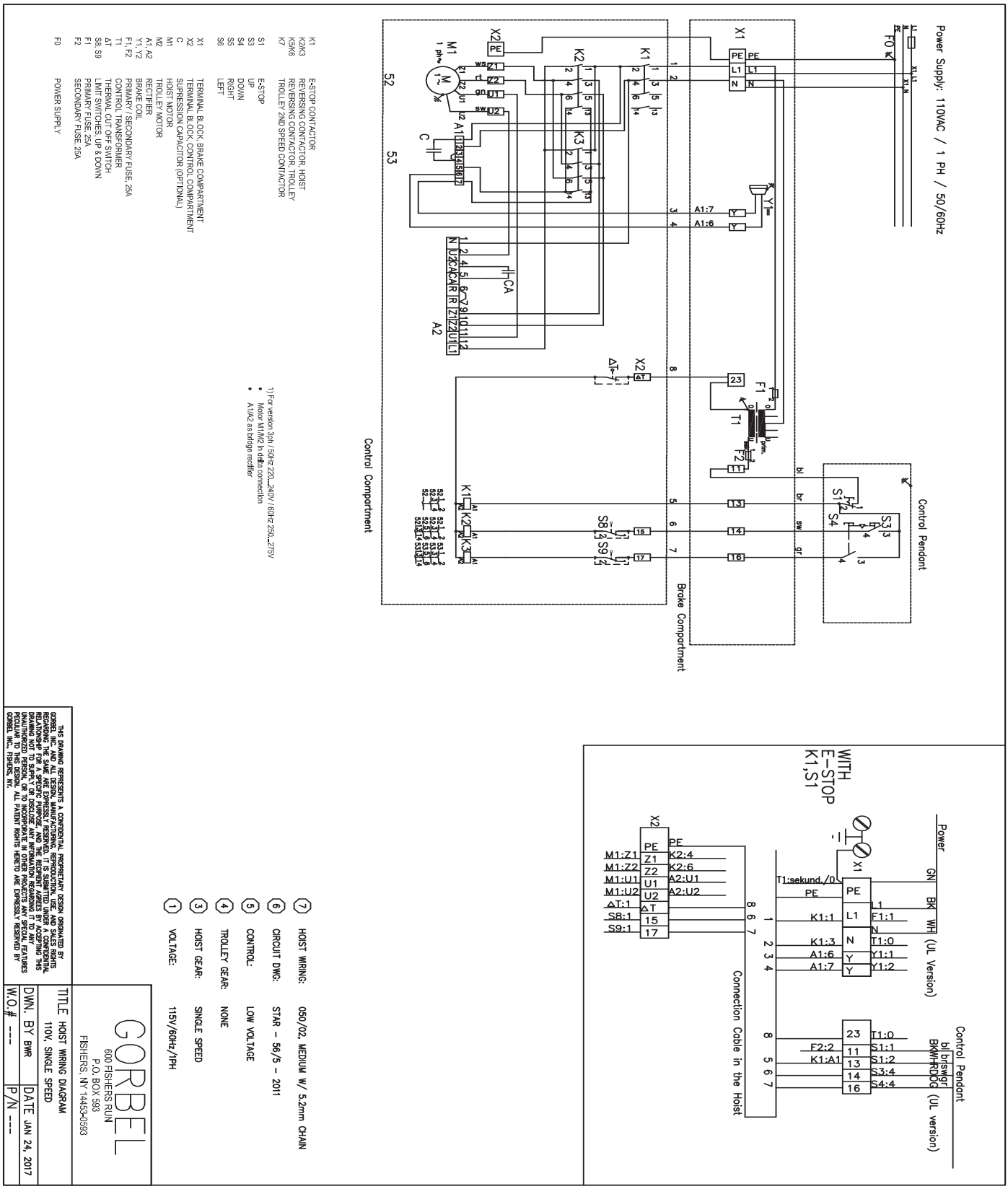


**Figure 13 - Wiring diagram - 110V, single speed.**

# SECTION 3 - DELIVERY, TRANSPORTATION AND STORAGE

**WARNING!** Read all instructions first before installing or operating equipment.

**WARNING!** Do not lift loads of more than 35 pounds (15 kilograms) without a lift assist.

The chain hoist, the trolley and the accessories are all packed in heavy-duty corrugated packaging. Some parts can be delivered in foam. After removal of the packaging, dispose of all packaging material safely and in accordance with national, federal and governmental laws.

## 3.1 Delivery

Check after delivery:

- For completeness of goods and documentation
- For visible transport damage

## 3.2 Transport

**WARNING!** Do not transport goods on damaged pallets.

**WARNING!** Do not transport hoist or hoist components if boxes or internal packing material is damaged or missing.

**CAUTION!** Do not expose the hoist to rain and humidity.

## 3.3 Storage

Storage conditions:

- Store indoors
- Temperature range -4°F to +104°F (-20°C to +40°C)
- Humidity 85% or less
- No aggressive media
- No high temperature difference (no water condensation; no corrosive environment)
- Do not expose to direct sunlight

**WARNING!** Storing and/or using your Gorbel equipment outside, when it is not specifically designed for such, may void all or part of the product warranty. Always store/use product(s) as designed.

# SECTION 4 - INSTALLATION

**WARNING!** The installation is to be performed by properly trained and authorized personnel only!

## 4.1 Qualification of Installation Workers

The worker/operator should be familiar with the hoist, hoist controls and installation/assembly procedures before being authorized to install or operate the hoist or lifting system.

The worker/operator shall be required to read this manual, the warnings, instructions and warning labels before starting installation or operation of the hoist.

The worker/operator shall obey all national or federal health and safety regulations during installation work and operation.

The worker/operator shall be trained in proper rigging procedures for the attachment of loads to the hoist's load hook.

The worker/operator shall be trained to be aware of potential malfunctions of the equipment that require adjustment or repair, and to be instructed to stop operation if such malfunctions occur, and to immediately advise their supervisor to take corrective action.

The worker/operator shall have normal depth perception, field of vision, reaction time, manual dexterity and coordination.

The worker/operator must **not** have a history of, or be prone to, seizures, loss of physical control, physical defects or emotional instability that could result in actions of the operator being a hazard to the operator or others.

The worker/operator must **not** operate a hoist or lifting system when under the influence of alcohol, drugs or medication.

## 4.2 General

**WARNING!** Overhead hoists are intended for vertical lifting of freely suspended, unguided loads only. Do **not** use the hoist for loads that are not lifted vertically, loads that are not freely suspended or loads that are guided.

**WARNING!** Do **not** stand or walk under a suspended load.

The worker/operator must make sure prior to work that the power supply is shut off and securely locked and properly tagged.

**WARNING!** Wear appropriate personal safety and protection equipment as demanded by OSHA regulations. Obey special requirements of the installation safety equipment. For example, wear eye protection glasses, protective shoes, gloves, helmet, harness.

## 4.3 Unpacking the Hoist

1. Put the package with the hoist and accessories on stable ground or a mounting pad.
2. Put this manual next to you.
3. Use this manual as a reference during installation.
4. Follow the instructions properly
5. Unpack the hoist and trolley, if ordered, and put it down safely.

**WARNING!** Do not lift loads of more than 35 pounds (15 kilograms) without a lift assist. Do not put anything on your feet.

6. You will need the following tools:
   - set of screwdrivers
   - set of socket head wrenches (metric)
   - pliers/multi-grip pliers
   - torque wrench (20 ft./lbs. to 420 ft./lbs.)
   - tape/ruler
7. The package of the chain hoist contains the following parts:
   - chain hoist with assembled chain, bottom hook and lift limiter (1)
   - chain box with fastening screw (metric dimensions) (2)
   - fastening bolts with washers and split pins (3)
   - either single or double hole suspension eye or hook suspension (4)

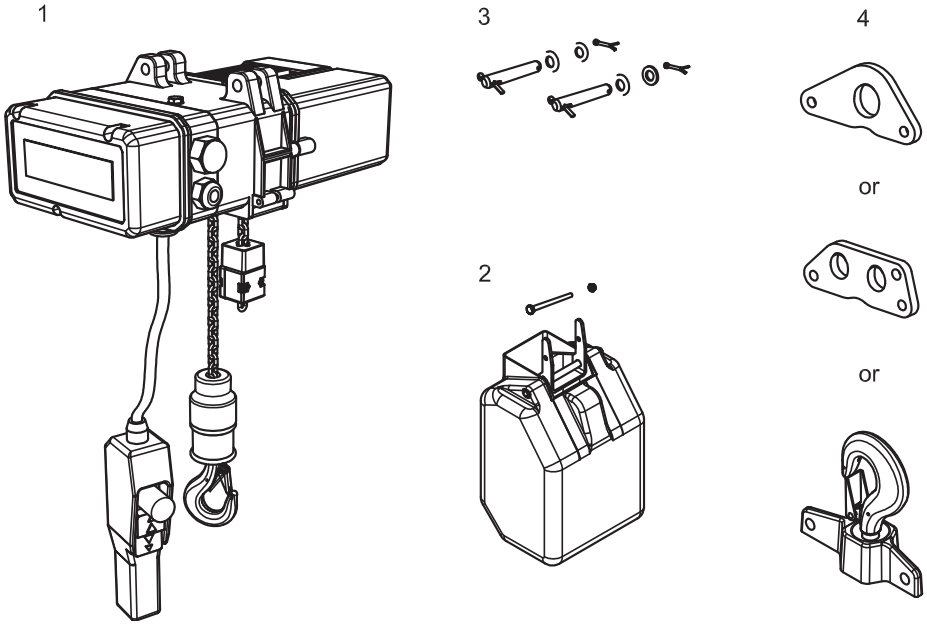


**Figure 14:** Package of chain hoist.

8. The package of the push trolley contains the following parts:
   - two side plates (1)
   - set of suspension bolts with nylock or counter nuts (metric dimensions), washers, spacers, distance tubes (2)
   - assembly instructions (3)

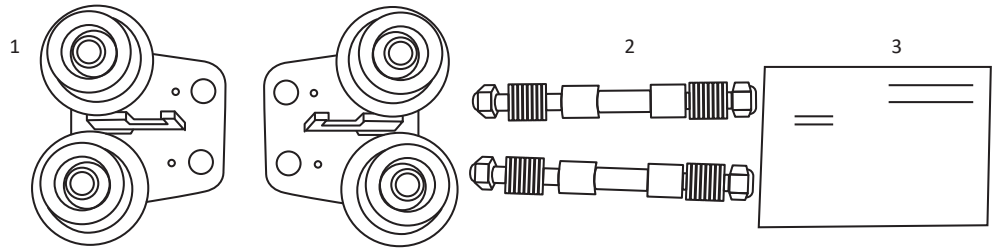


**Figure 15:** Package of push trolley.

9. The package of the electric trolley contains the following parts:
   - geared side plate (1)
   - ungeared side plate (2)
   - set of suspension bolts with nylock or counter nuts (metric dimensions), washers, spacers, distance tubes (3)
   - low voltage control with assembled cables and fastening screws (4)
   - assembly instructions (5)

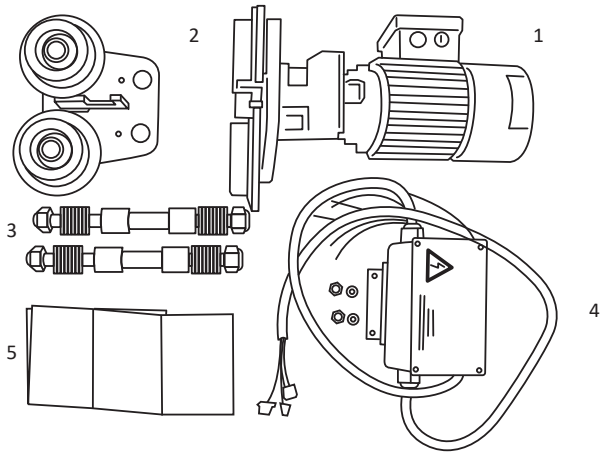


**Figure 16:** Package of electric trolley.

**CAUTION!** Do not start to assemble before you have found all of the necessary items. Use original parts from the manufacturer only.

## 4.4 Inspection Before Assembly

- Check for visible damage.
- Check for completeness of delivery. Check against packing list/order confirmation.
- Check that the load capacities on the type plate of the hoist and on the load hook match.

**WARNING!** Prior to installation of the hoist, ensure that the suspension and the supporting structure are adequate to support the chain hoist and its loads. If necessary, consult a professional that is qualified to evaluate the adequacy of the suspension location and its supporting structure.

## 4.5 Assembly

**CAUTION!** Use original parts from the manufacturer only.

### Suspension with Single Hole Suspension Plate

**CAUTION!** The single hole suspension eye must be inserted into the suspension holes on the electric chain hoist and pinned into place with the two bolts. Use washers with the bolts and secure position with correctly bent split pins.

**WARNING!** On the suspension eye are two symbols: a single fall symbol and a double fall symbol. For a hoist configured for single fall, the single fall symbol has to be on the chain box side of the hoist. For a double fall hoist, the double fall symbol on the suspension eye has to be on the box side of the hoist body.

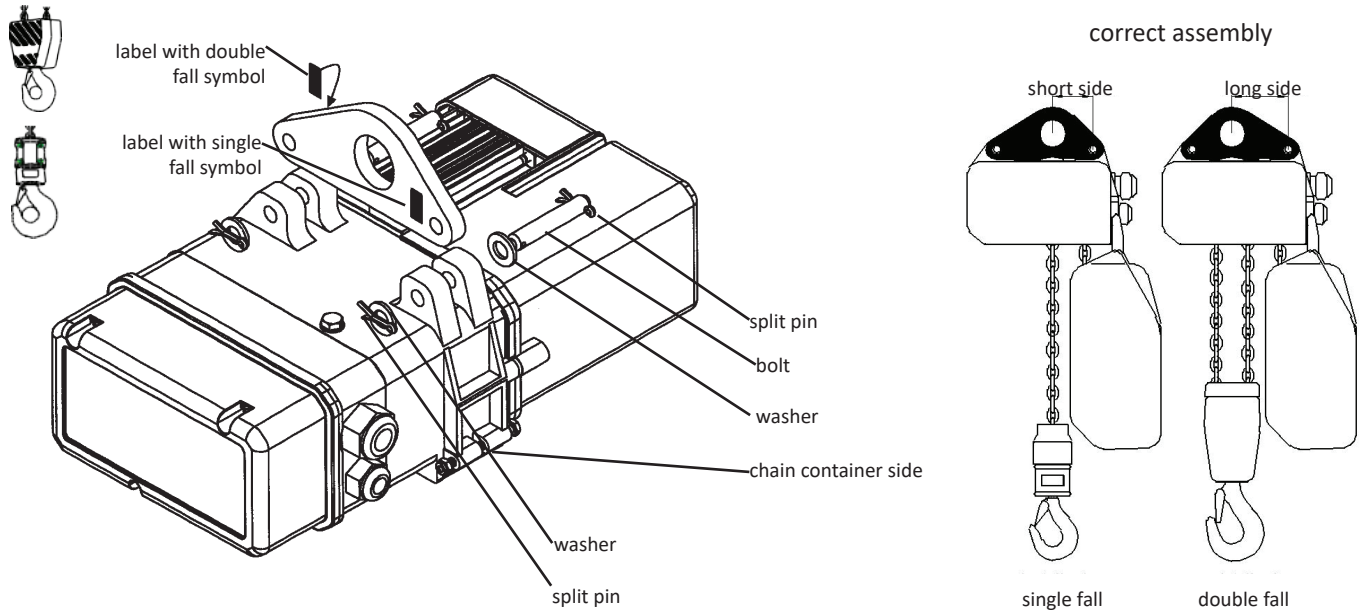


**Figure 17:** Single hole suspension plate.

### Suspension with Double Hole Suspension Plate

**CAUTION!** The suspension eye must be inserted into the suspension holes on the electric chain hoist and pinned into place with the two bolts. Use washers with the bolts and secure position with two split pins.

**WARNING!** The hole for the tandem trolley on the double hole suspension eye must be on the chain box side.

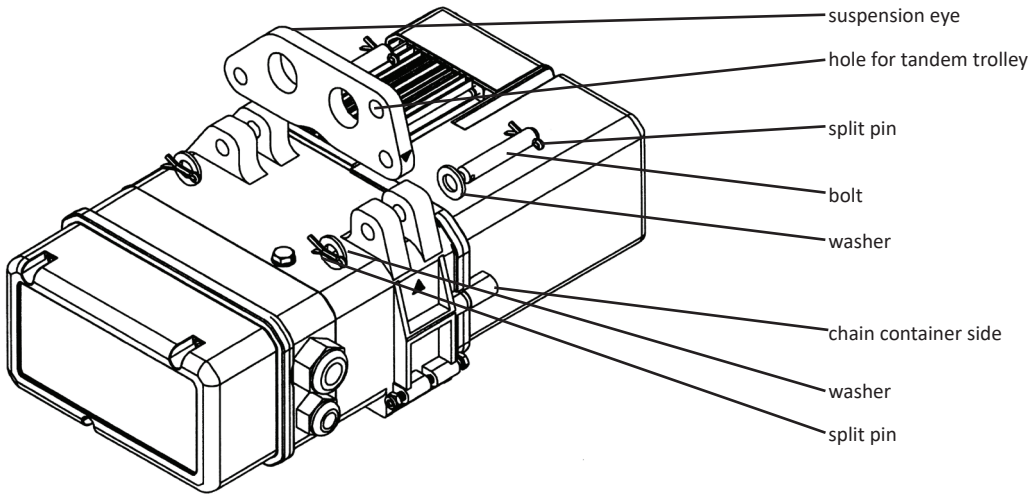


**Figure 18:** Double hole suspension plate.

**Suspension with Rigid Hook Suspension**

| | |
|---|---|
| **CAUTION!** | The hook suspension has to be pinned with two bolts to the suspension holes at the chain hoist and secured with washers and correctly bent split pins. |

| | |
|---|---|
| **WARNING!** | On the hook suspension are two symbols: a single fall symbol and a double fall symbol. For a hoist configured for single fall, the single fall symbol has to be on the chain box side of the hoist. For a double fall hoist, the double fall symbol on the hook suspension has to be on the chain box side of the hoist body. |

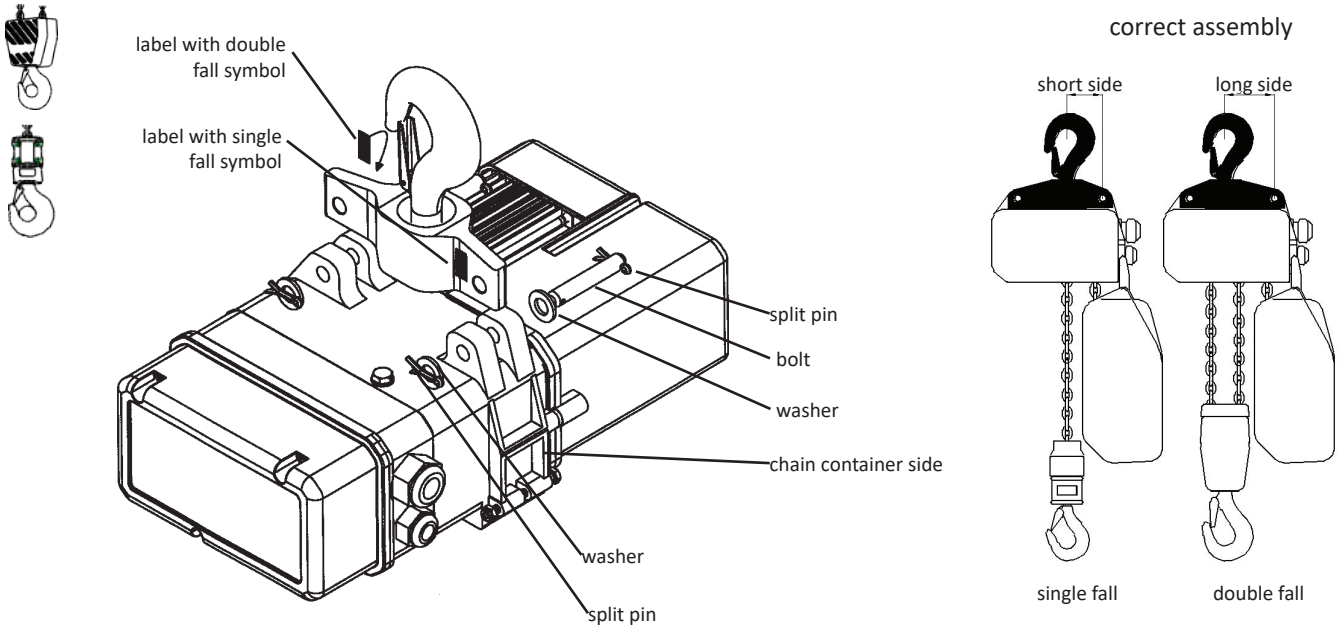


**Figure 19:** Rigid hook suspension.

**Vent Information**

After completion of assembly, remove the plug and install vent screw, being careful not to overtighten. Vent screw installation must be completed before hoist is put into operation.

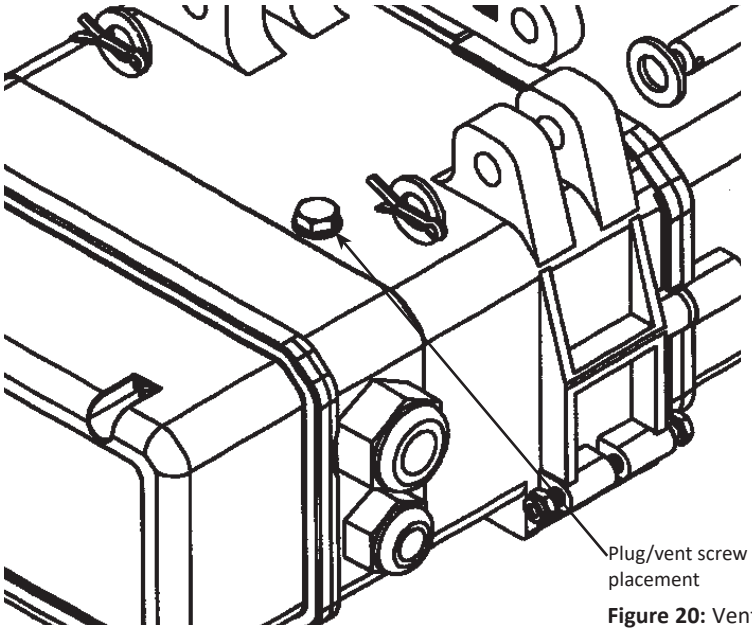


**Figure 20:** Vent.

**Chain Container**

The delivery contains either a hard shell plastic chain container or a soft canvas chain container. All chain containers are marked with the chain diameter and the maximum quantity of chain being accommodated.

Example: 4/12 means chain diameter 4 millimeters and maximum quantity 39 feet (12 meters).

**WARNING!**

Double check the chain length on the hoist with the maximum accommodation length marked on the chain box. Consider that for double fall hoists the chain length is twice the lifting height.

Do not continue if you discover a longer chain on the hoist as marked on the chain box. The chain dimension and capacity are shown on the base of the canvas chain container or at the side of the plastic chain container.

**Do not overload the chain container. It can damage the hoist and cause serious accidents.**

**Mounting of Plastic Chain Container**

| chain container - type | chain diameter x chain pitch (mm x mm) | max. filling quantity in ft (m) |
|---|---|---|
| 4/12 5/8 7/5 | 4 x 12 | 39(12) |
| | 5.2 x 15 | 26 (8) |
| | 7.2 x 21 | 16 (5) |
| 4/16 5/10 7/8 | 4 x 12 | 52 (16) |
| | 5.2 x 15 | 32 (10) |
| | 7.2 x 21 | 26 (8) |

**Table 3:** Types of plastic chain containers.

1. Insert the chain end with lift limiter, its rubber bumper and spring actuator (if scope of supply) loosely into the chain box.
2. Assemble the plastic chain container onto the chain hoist with screw and secure with nylock nut (metric dimension).
3. Feed the chain into the plastic chain container maximum up to the marked filling height of the chain container by means of the motor, press 'UP' button.

**WARNING!** Use the nylock nut only once.

**WARNING!** Keep hand and fingers away from the running chain.

**Danger of serious injury for hands and fingers!**

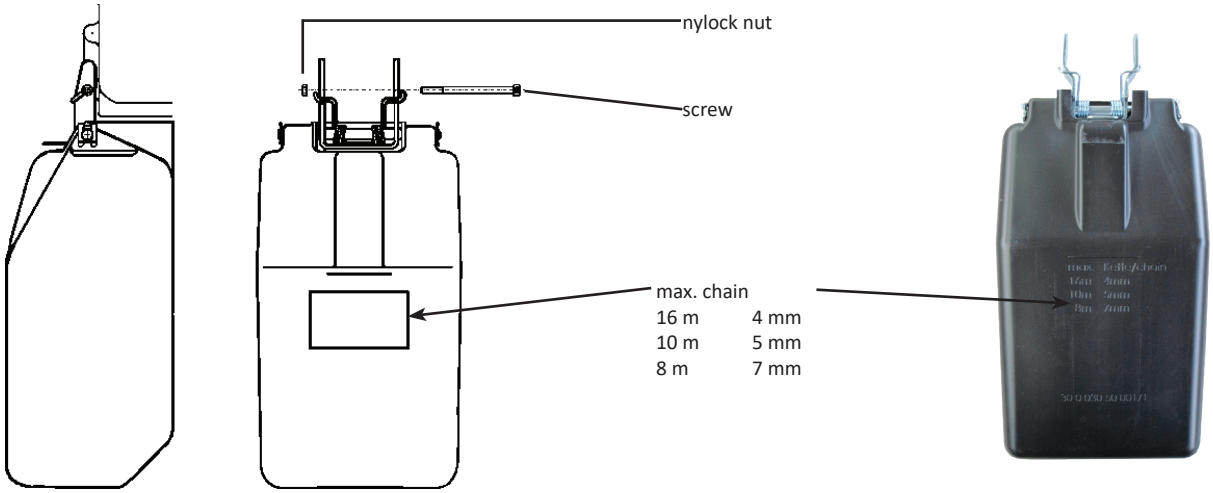


**Figure 21:** Plastic chain container.

**Steel Chain Containers**

Steel chain containers will be delivered on customer's request. The assembly has to be arranged according to project drawing as agreed to in the order confirmation.

**WARNING!** The chain dimension and the maximum chain length of the respective chain container are noted on the tag of the steel container.

Do not start assembling the chain container if the project drawing and/or the tag are missing. Ask the manufacturer for these documents.

**Mounting of Canvas Chain Container**

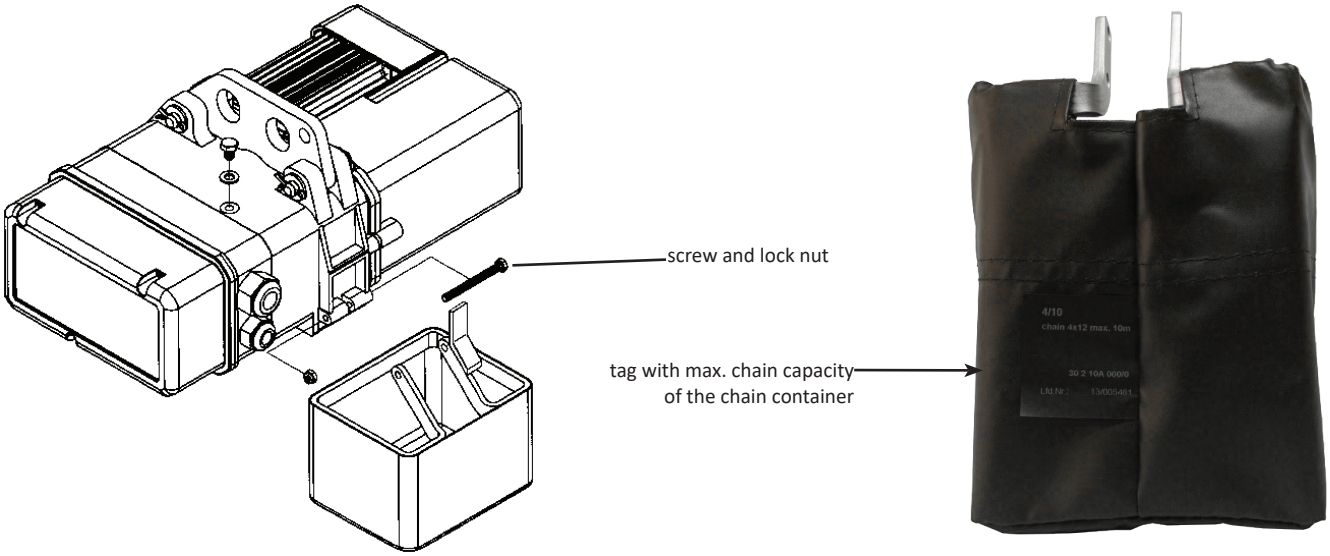


**Figure 22:** Canvas chain container.

1. Insert the chain end with lift limiter, its rubber bumper and spring actuator (if scope of supply) loosely into the chain container.
2. Assemble the canvas chain container onto the chain hoist with screw and secure with nylock nut.
3. Feed the chain into the canvas chain container by means of the lifting motor, press 'UP' button.

**WARNING!** Use the nylock nut only once.

**WARNING!** Keep hand and fingers away from the running chain.

**Danger of serious injuries for hands and fingers!**

**Mounting of an Oversized Canvas Chain Container**

**WARNING!** If the chain weight is more than 55 lbs. (25 kg), the strain of the chain container has to be relieved with a textile strap. Adjust the chain box position to the suspension by using the ratchet strap with a chain load of approximately 20 lbs. (10 kg) inside the chain container until the strain has just been taken off the chain container suspension screw. Continue to feed the rest of chain after adjustment by using the motor and pressing the 'UP' button.

For a stationary suspended hoist, the suspension point for this strap has to be foreseen in the building/crane structure, as the prevailing conditions are unknown. For a hoist with trolley, the manufacturer provides a tandem trolley to fit the chain container strainer strap. The strainer strap has to be tightened in accordance with this manual, inspected at regular intervals and corrected if necessary. Use edge protectors for the strap at the suspension points.

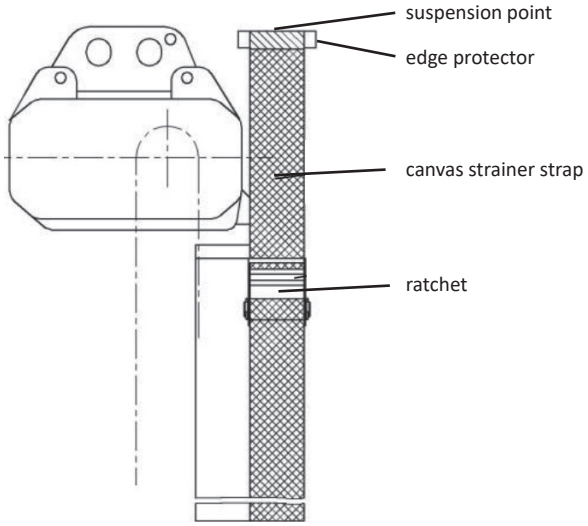


**Figure 23:** Stationary suspended electric chain hoist.

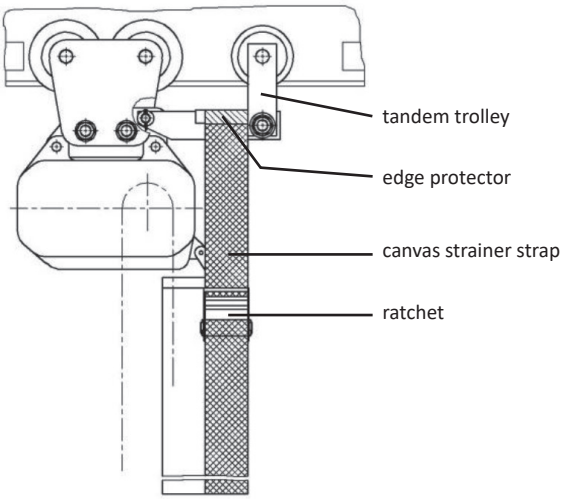


**Figure 24:** Electric chain hoist with chain container suspended at the tandem trolley.

**CAUTION!** Electric chain hoists with chain container suspended at a tandem trolley are not suitable for single bolt trolleys and curved beams. In special cases ask the manufacturer.

**CAUTION!** The end of the strainer strap has to be fixed and tightened with the ratchet.

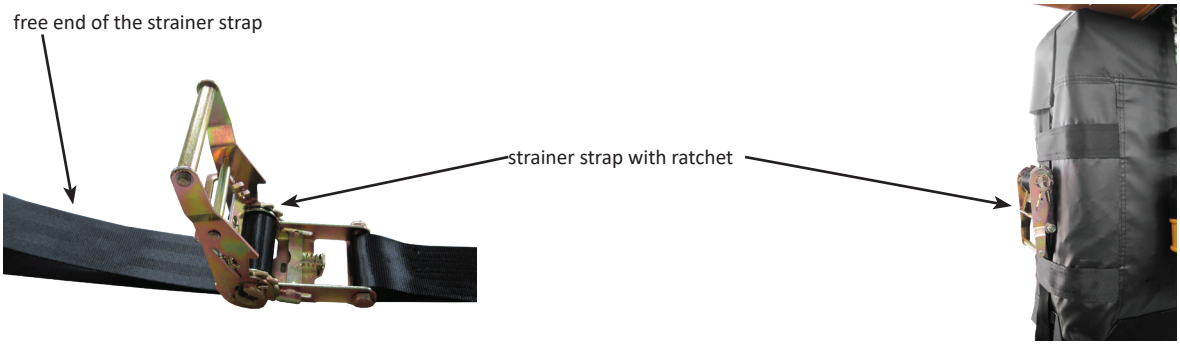


**Figure 25:** Scheme of the fixed strainer strap.

## 4.6 Electrical Connection

**CAUTION!** The electrical installation must comply with NEC and local codes as they apply. After having completed the installation, checks have to be executed in accordance with NEC and local codes.

Details of the control can be seen in the wiring diagram.

### Mains Power

**WARNING!** The mains supply (main incoming line conductor) must be able to be disconnected at all poles by means of a mains switch.

Work on the electric installation shall only be carried out by trained specialists. The hoist must be disconnected from the power supply prior to work.

**Fuses (slowly blowing) at 115 V (1 phase), 230 V, 460 V and 575 V (3 phase)**

Based on Hoist Motor FLA. Fuse according for mainline power.

| Fuse (slowly blowing) | Voltage |
|---|---|
| 25 Amps | 115 v/1 phase/60 Hz |
| 25 Amps | 230 v/3 phase/60 Hz |
| 15 Amps | 460 v/3 phase/60 Hz |
| 12 Amps | 575 v/3 phase/60 Hz |

Based on largest motor for hoist

**Table 4:** Fuse ratings.

**ELECTRICAL SHOCK HAZARD!** Check that the mains voltage complies with that specified on the type plate. Connect mains supply cable and control cable in accordance with wiring diagram. Recommend minimum 14 AWG 4 conductor cable (depending on festoon length, may need to go to heavier 12 or 10 gauge).

**CAUTION!** The hoist is indicated for use at a clockwise (right turning) electrical field (CW). If a counter clockwise field (CCW) is provided the hoist will operate in reverse. It means the hoist will lift when the 'DOWN' button is pressed.

Ask the electrician to provide a CW field. The mains supply is correct if the hoist will lift the load upwards when the 'UP' button is pressed. After connecting, press 'UP' button for lifting. If the load moves downwards, interchange the L1 and L2 supply cores.

The electriction must make sure prior to work that the power supply is shut off and securely locked and properly tagged.

**WARNING!** Do not use the hoist when the lifting directions do not comply with the symbols on the control pendant. Under the conditions, the electric limit switches will not be working.

**Low Voltage Control**

**CAUTION!** Standard control voltage is 24 VAC. Other control voltages are available on request.

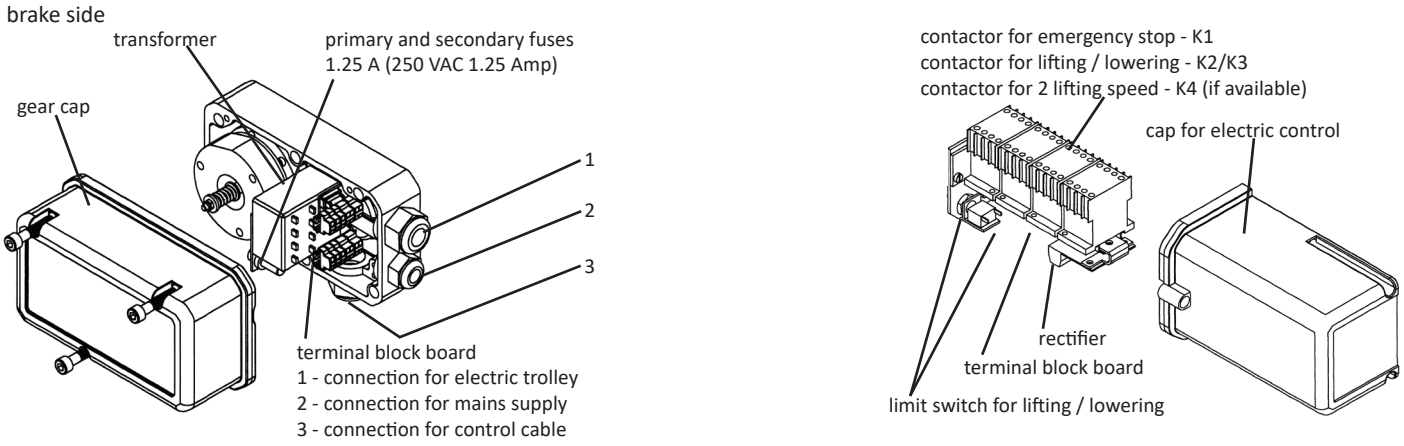


**Figure 26:** Low voltage control complete.

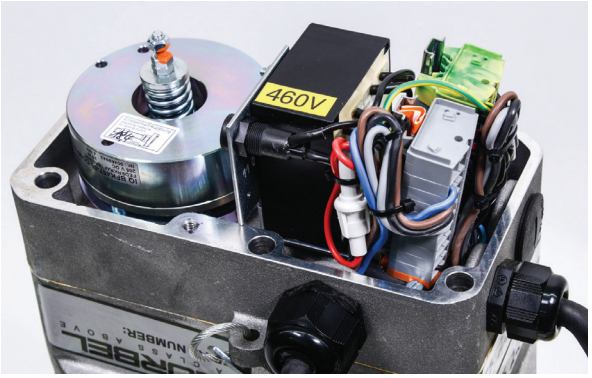


**Figure 27:** Low voltage control at brake side (e.g. version 021/..)

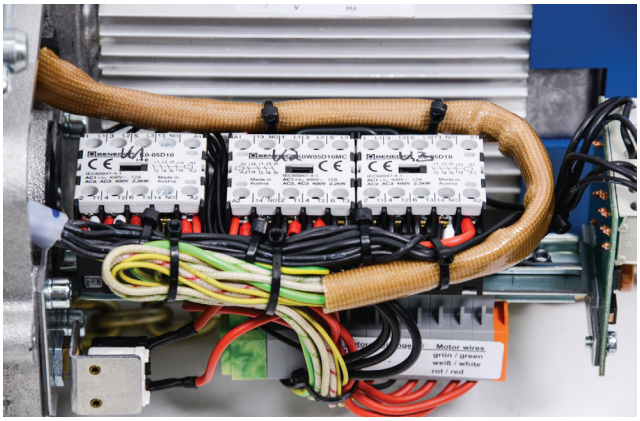


**Figure 28:** Low voltage control at motor side (e.g. version 020/..)

**Electric Limit Switches**

All electric chain hoists sold are equipped with a low voltage control and limit switches for lifting and lowering (top and bottom limits).

These limit switches are operated by two pins protruding out of the chain guide. They can be activated either by the hook (top limit) or lift limiter (bottom limit). The pins are pressing the limit switches inside the chain hoist.

**CAUTION!** For the proper function of limits, the up/down directions at the pendant must correspond to the moving direction of the hook.

Check the function of the limit switches for lifting and lowering prior to use (see electrical connections).

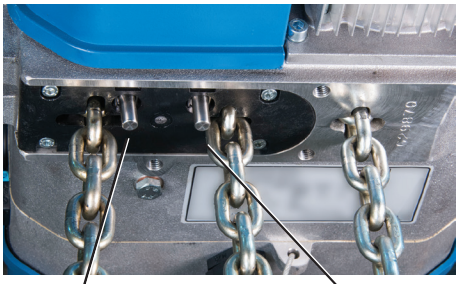

limit switch for bottom limit **DOWN**

limit switch for top limit **UP**

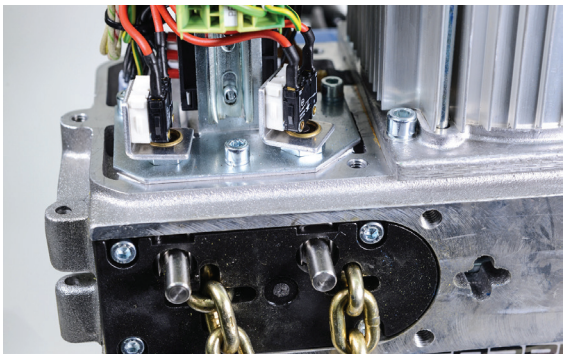

**Figure 29:** Electric limit switches for low voltage control.

**Trolleys (Optional)**

| | Part No. | Standard Flange Width (in) | Part No. | Larger Flange Width, S1 (in) | Part No. | Larger Flange Width, S2 (in) | Speed (fpm) | Capacity (lbs.) | Hoist Type |
|---|---|---|---|---|---|---|---|---|---|
| Motorized Single Speed 460-3-60 | 95100 | 1.97-4.17 | 95110 | 4.33-7.87 | 95120 | 8.27-11.81 | 63 | 1000 | 020-030 |
| | 95101 | 2.6-5.31 | 95111 | 5.39-8.46 | 95121 | 8.66-11.81 | 63 | 2000 | 030-071 |
| | 95102 | 2.6-5.31 | 95112 | 5.39-8.46 | 95122 | 8.66-11.81 | 63 | 4000 | 070/071 |
| | 95103 | 3.23-6.1 | 95113 | 5.39-8.46 | 95122 | 8.66-11.81 | 31 | 4000 | 090/091 |
| | 95104 | 3.23-61 | 95114 | 5.39-8.46 | 95124 | 8.66-11.81 | 31 | 7000 | 090/091 |
| Motorized Two Speed 430-3-60 | 95130 | 1.97-4.17 | 95140 | 4.33-7.87 | 95150 | 8.27-11.81 | 19/78 | 1000 | 020-030 |
| | 95131 | 2.6-5.31 | 95141 | 5.39-8.46 | 95151 | 8.66-11.81 | 19/78 | 2000 | 030-071 |
| | 95132 | 2.6-5.31 | 95142 | 5.39-8.46 | 95152 | 8.66-11.81 | 19/78 | 4000 | 070/071 |
| | 95133 | 3.23-6.1 | 95142 | 5.39-8.46 | 95152 | 8.66-11.81 | 19/78 | 4000 | 090/091 |
| | 95134 | 3.23-6.1 | 95144 | 5.39-8.46 | 95154 | 8.66-11.81 | 19/78 | 7000 | 090/091 |
| | 95135 | 3.54-6.1 | 95145 | 6.3-8.9 | 95155 | 9.45-12.2 | 15/63 | 10000 | 110/111 |
| Manual Push | 95160 | 1.97-4.17 | 95170 | 4.33-7.87 | 95180 | 8.27-11.81 | N/A | 1000 | 020-030 |
| | 95161 | 2.6-5.31 | 95171 | 5.39-8.46 | 95181 | 8.66-11.81 | N/A | 2000 | 030-071 |
| | 95162 | 2.6-5.31 | 95172 | 5.39-8.46 | 95182 | 8.66-11.81 | N/A | 4000 | 070/071 |
| | 95163 | 3.23-6.1 | 95172 | 5.39-8.46 | 95182 | 8.66-11.81 | N/A | 4000 | 090/091 |
| | 95164 | 3.23-6.1 | 95174 | 5.39-8.46 | 95184 | 8.66-11.81 | N/A | 7000 | 090/091 |
| Manual , Geared | 95200 | 3.54-6.1 | 95210 | 6.3-8.9 | 95230 | 9.45-12.2 | N/A | 10000 | 110/111 |

**Table 5:** Trolleys.

**CAUTION!** For all other beam sizes, inform the manufacturer about the flange width and thickness. The manufacturer will choose the relevant trolley size.

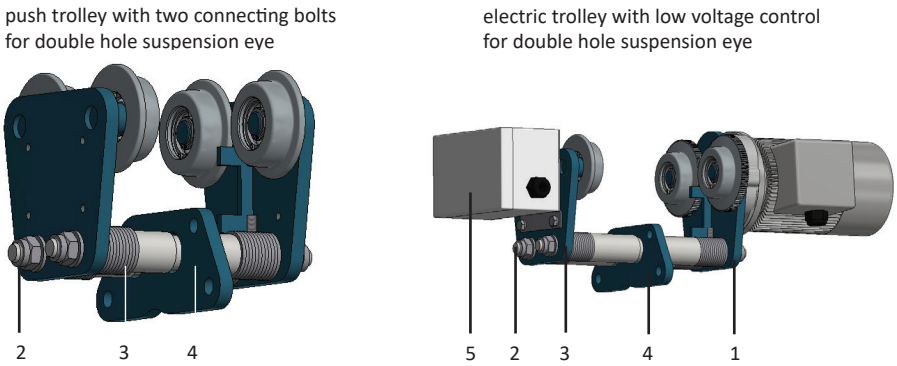


1 trolley motor
2 suspension bolts
3 spacing washers
4 suspension eye
5 low voltage control

**Figure 30:** Trolley types.

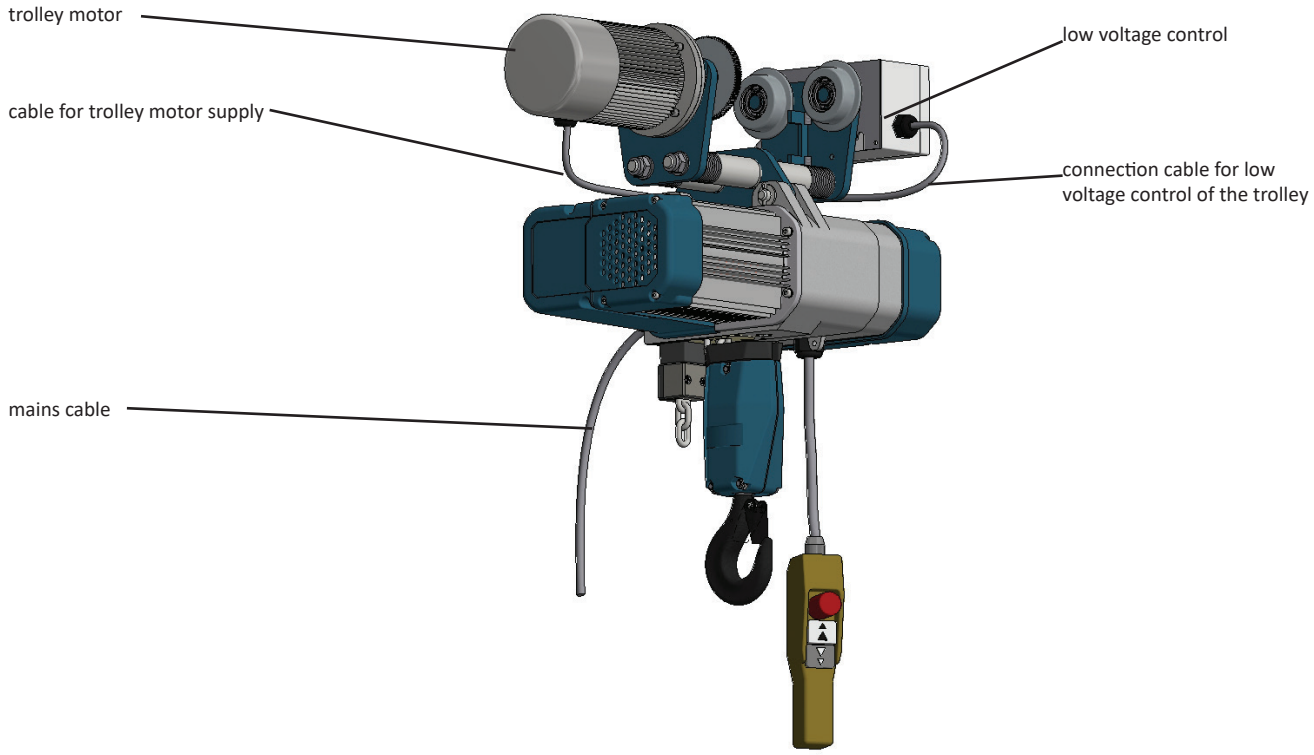


**Figure 31:** Configuration of hoist and trolley (example).

**Electric Trolleys with Counterweight**

This unit can be retrofitted to each trolley if necessary. The kit does not influence any features of the trolley.

**CAUTION!** If electric trolleys, especially with double speed, are used on girders with a very small width, it may be necessary to provide a counterweight which prevents the trolley from tipping.

**Low Voltage Control of Electric Trolleys**

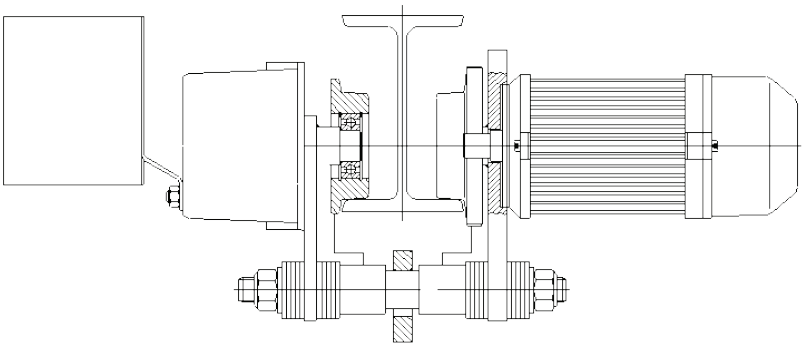

**Figure 32:** Counterweight for electric trolley.

The contactors for switching the trolley motor are located in a special contactor box. The contactor box must be assembled with two hexagon socket head cap screws M8x10 DIN 933 on the non-driven side plate.

Connect the two leads protruding from the contactor box to the terminal section and to the trolley motor as shown in the wiring diagram. After electrical connection, check that the electric chain hoist and trolley are working correctly.

**Assembly of Trolley**

1. Measure girder flange width.
2. Prepare trolley parts for assembly. The parts are:
   (2) side plates, (1) or (2) bolts, (2) or (4) distance tubes, spacers and nylock or counter nuts with washers

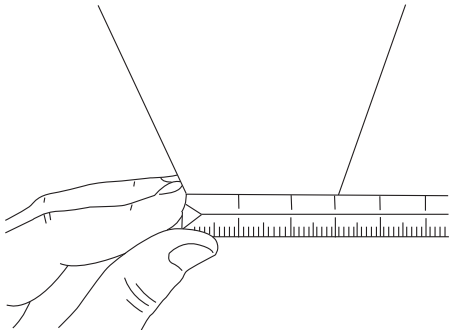

**Figure 33:** Girder flange width

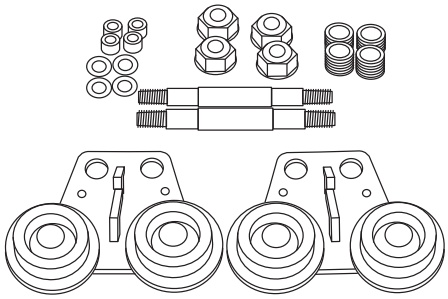

**Figure 34:** Trolley parts for assembly

3. Determine quantity of washers. Washers must be used symmetrically.
4. Assemble one side plate with washers, spacer and suspension plate.

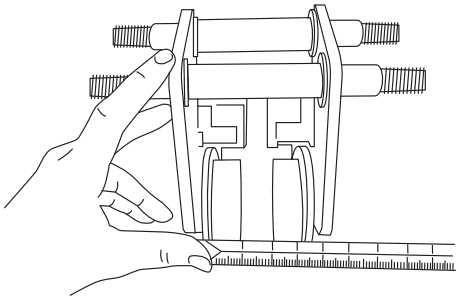

**Figure 35:** Determination of quantity of washers.

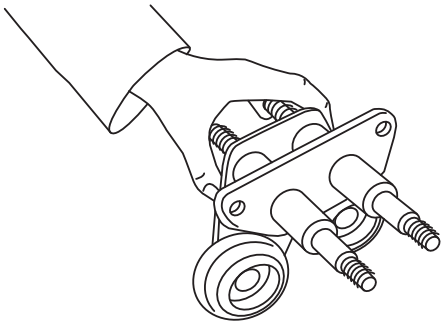

**Figure 36:** Assembly of one side plate.

5. Fit nylock nuts with washers on this side plate.

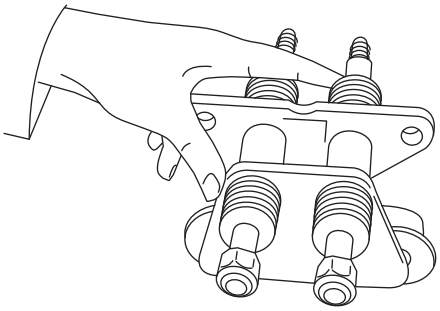

**Figure 37:** Nylock nuts.

**WARNING!** The two trolley connecting bolts are to be fixed to the side plate so as to allow a clearance of 1/16 inch between the running wheel flange and the girder flange. The width is adjusted by inserting spacing washers **symmetrically**. The suspension eye is mounted between the spacing bushings on the trolley connecting bolts.

**Use the original parts only.**

6. Put the trolley together on the beam. Tighten the nylock of counter nuts.
7. Double-check the space between girder flange and trolley wheel (approximately 1/16 inch on each side).

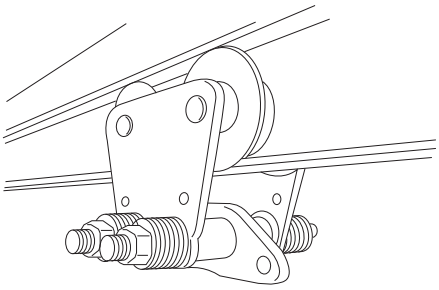

**Figure 38:** Assembly at girder flange.

8. Tighten the nuts of the connecting bolts with a torque wrench only.

| Hexagon nuts | Tightening torque in ft/lb. (Nm) |
|---|---|
| M16x1.5 | 55 (75) |
| M22x1.5 | 110 (150) |
| M36x1.5 | 415 (560) |

**Table 6:** Tightening torque.

9. Fit the electric chain hoist to the trolley assembly with bolts, washers and split pins
10. Check the free movement between the trolley and the chain hoist in all directions as shown.

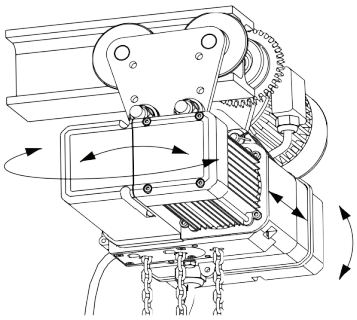

**Figure 39:** Movement between chain hoist and trolley.

**CAUTION!** Movement in the directions shown by the arrows must still be possible between the hoist and the trolley when assembly is complete.

The type of suspension plate depends on the respective chain hoist type and trolley type (girder flange width).

**CAUTION!** The electric trolleys have to be put together in the same manner.

## 4.7 Inspection Before Initial Operation

The electric chain hoist and/or trolley must be inspected prior to initial operation by a competent person. The inspection has to be visual and functional.

Inspections should be done by a representative of the manufacturer, the supplier or trained personnel of the user's company. The inspection before initial operation is the responsibility of the user.

**WARNING!** Do not operate this electric chain hoist until any and all failures identified during initial inspection have been addressed.

- Check adequacy of rated capacity for all hooks, chains, slings and other lifting attachments before use.
- Inspect all load suspension equipment / structure for damage prior to use and replace or repair all damaged parts.
- Check chain over the whole length concerning irregularities prior to operating the hoist and correct if necessary.
- Ensure that the hoist is properly installed to the fixed point or trolley.
- If the hoist is installed on a trolley, check that the trolley is properly installed on the beam and check that the end stops for the trolley are properly installed and secured on the beam.
- If the hoist is installed on a trolley, check that adequate movement between the chain hoist and the trolley is given.
- Ensure that all nuts, bolts and split pins are sufficiently fastened.
- Ensure that the control pendant is strain relieved by the wire rope.
- Before operating the hoist and the trolley, read this manual and become familiar with Section 5 - Operation on page 30.
- Before operating the equipment, ensure that the hoist and trolley meet the "Inspection, Testing and Maintenance requirements" of ANSI/ASME B30.16 and OSHA 1910.179.
- Before operating the hoist and trolley, ensure that nothing extends into the range of operation.
- Measure the dimensions of all hooks on the hoist and record the dimension.
- Check that after connection to the power supply, the lifting directions of the hoist correspond to the commands 'UP' and 'DOWN' on the control pendant.

**ATTENTION!** Chain must be lubricated prior to operation. See Section 6.9 on page 47.

# SECTION 5 - OPERATION

## 5.1 Hoist Operator Qualification

The worker/operator shall be familiar with the hoist, hoist controls and installation/assembly procedures before being authorized to install or operate the hoist or lifting system.

The worker/operator shall be required to read this manual, the warnings, instructions and warning labels before starting installation or operation of the hoist.

The worker/operator shall obey all national or federal health and safety regulations during installation work and operation.

The worker/operator shall be trained in proper rigging procedures for the attachment of loads to the hoist hook.

The worker/operator shall be trained to be aware of potential malfunctions of the equipment that require adjustment or repair, and to be instructed to stop operation if such malfunctions occur, and to immediately advise his supervisor to take corrective action.

The worker/operator shall have normal depth perception, field of vision, reaction time, manual dexterity and coordination.

The worker/operator must **not** have a history of or be prone to seizures, loss of physical control, physical defects or emotional instability that could result in actions of the operator being a hazard to the operator or others.

The worker/operator must **not** operate a hoist or lifting system when under the influence of alcohol, drugs or medication.

## 5.2 Dos and Don’ts for Operation

**WARNING!** Improper operation of the chain hoist can create a potentially hazardous situation which could result in death or serious injury and substantial property damage.

To avoid potential accidents, the operator must observe the following instructions:

- **Do not** operate a damaged, malfunctioning or unusually performing hoist.
- **Do not** operate a hoist until you have thoroughly read and understood manufacturer’s operating and maintenance instructions or manuals.
- **Do not** operate the chain hoist that has been modified without the manufacturer’s written approval or without certification.
- **Do not** lift more than the rated load for the hoist.
- **Do not** use the chain hoist to lift, support or transport people.
- **Do not** lift loads over people.
- **Do not** operate the chain hoist unless all persons remain clear of the supported load.
- **Do not** operate the chain hoist unless the load is centered under the hoist.
- **Do not** attempt to extend the load chain or repair damaged load chain.
- **Do not** touch a running chain with the fingers.
- **Do not** use the load chain as a sling or wrap load chain around load.
- **Do not** apply the load to the tip of the hook or to the latch hook.
- **Do not** apply load if load is not evenly distributed on all load-supporting chain.
- **Do not** operate beyond the limits of the load chain travel.
- **Do not** leave load supported by the hoist unattended unless specific precautions have been taken.

- **Do not** allow the load chain or hook to be used as an electrical or welding ground.
- **Do not** allow the load chain or hook to be touched by a live welding electrode.
- **Do not** remove or obscure the warnings on the hoist.
- **Do not** operate the chain hoist if the safety tags or decals are missing or illegible.
- **Do not** operate the hoist unless it has been securely attached to a suitable support.
- **Do not** operate the chain hoist unless load slings or other approved single attachments are properly sized and seated in the hook saddle.
- **Do not** use the chain hoist in such a way that could result in shock or impact loads being applied to the hoist.
- **Do not** use the chain hoist load limiting or warning device to measure loads.
- **Do not** use limit switches as routing operating stops. They are emergency devices only.
- **Do not** allow your attention to be diverted from operating the hoist.
- **Do not** adjust or repair the chain hoist unless qualified to perform such adjustments or repairs.
- **Do not** drop suspended loads. Operation of magnetic handling devices or grippers at the electric chain hoist is not allowed.
- **Do not** lift submerged loads.
- Take up slack chain carefully. Ensure that load is balanced before continuing.
- Shut down a chain hoist that malfunctions or performs unusually and report such malfunctions.
- Make sure that the hoist limit switches operate properly.
- Warn personnel before lifting or moving a load.
- Warn personnel of an approaching load.
- Keep hands and fingers away from moving parts, such as chain. **Danger of serious injuries of hands and fingers!**
- Protect the chain hoist's load chain from welder splatter or other damaging containments.
- Maintain a firm footing or be otherwise secured when operating the chain hoist.
- Check brake function by tensioning the chain hoist prior to each lift operation.
- Use hook latches. Attach slings, chains, etc. under slack conditions only.
- Make sure that the hook latches are closed and not supporting any parts of the load.
- Make sure the load is free to move and is clear of all obstructions.
- Avoid swinging the load or hook.
- Avoid collisions of the chain hoist, the load, the trolley or parts of it with structures, other hoists, etc.
- Make sure hook travel is in the same direction as shown on controls.
- Inspect the chain hoist regularly, replace damaged or worn parts and keep appropriate records of maintenance.
- Use the chain hoist manufacturer's recommended parts when repairing the unit.
- Lubricate load chain per hoist manufacturer's recommendations. Please reference section 6.9 Lubrication, on page 47, for additional detail.

## 5.3 Installation, Service and Operation (General)

Operators delegated to install, service or independently operate the electric chain hoist must have had suitable training and be competent.

Only trained personnel who are familiar with proper hoist operation and all pertinent safety regulations should use this hoist.

## 5.4 Inspection Before Starting Work

**WARNING!** Before starting work, inspect the electric chain hoist, trolley, chain and all load bearing components every time for visual defects.

Further daily checks:

- Functional test of brake.
- Functional test of limit switches.
- In case of electric chain hoist with trolley, check that the trolley runway is free from obstructions and that the end stops on the trolley runway are fitted and secured.
- Inspect the load chain for sufficient lubrication and lubricate if necessary. Please reference section 6.9 Lubrication, on page 47, for additional detail.
- Visually check the load chain for external defects.

**WARNING!** Do not work with the electric chain hoist before any defects have been corrected.

**WARNING!** Confirm that the load is properly attached to the hoist and trolley by running a short test cycle where you lift and lower the load several times.

**WARNING!** The selection and calculation of the proper suspension point and beam construction for trolley are the responsibility of the owner.

## 5.5 Operation

**WARNING!** The load must always be seated in the saddle of the hook. Never attach the load to the tip of the load hook. This also applies to the suspension hook.

**WARNING!** Do not remove the safety latch. Make sure that the latch is safely closed after suspending the load.

**WARNING!** Never use the load chain as a sling chain. Use only approved and certified slings or lashing devices to attach the load.

**Attaching the Load**

**CAUTION!** Do not pull on the control pendant. Push the electric chain hoist or its bottom hook or the suspended load to move a hoist with a push trolley.

**Push Trolleys**

**Electric Trolleys**

Travel the electric trolley by operating the 'FORWARD' button or 'REVERSE' button.

Electric trolleys with two speeds:

- Press the button until first stage to activate the slow speed, press further into the second stage to activate the main speed.

| | |
|---|---|
| **CAUTION!** | Use the slow speed for short periods of traveling only. |

**Lifting and Lowering of the Load**

Lift the load or the bottom hook by operating the 'UP' button.

Lower the load or the bottom hook by operating the 'DOWN' button.

Electric chain hoists with two speeds:

- Press the button until first stage to activate the slow speed, press further into the second stage to activate the main speed.
- In order to raise the load, always use the lowest available lifting speed. The chain must be loaded at this speed and may not lie slack on the floor.

| | |
|---|---|
| **CAUTION!** | The slow speed may only be used for short hook travel distances. The lift limiter (chain end stop) may not be used as an operational limit switch. |

**Emergency Stop**

Stop all movement, if necessary, by pressing the red, mushroom shaped button on the control pendant.

| | |
|---|---|
| **WARNING!** | Operating the emergency stop does not automatically disconnect the mains supply to the electric chain hoist or the trolley. Remove the reason for the malfunction. After that, release the emergency stop button by rotating in clockwise direction. |

**Lift Limiter**

The lift limiter (chain end stop) must be connected to the idle chain strand.

| | |
|---|---|
| **WARNING!** | The lift limiter should be assembled at the third link from the end of the idle chain strand. In cases where the end of the idle chain strand will be fixed additionally to the chain hoist body or chain container frame, the lift limiter must be assembled 20 inches (50 cm) from the end of the idle chain strand. |

**Limit Switches**

The limit switches (if ordered) are a safety device and may not be used as operational limiting device.

# SECTION 6 - MAINTENANCE

## 6.1 Maintenance Schedule

**WARNING!** Maintenance is to be performed by properly trained and authorized personnel only.

**ELECTRICAL SHOCK HAZARD!** Maintenance work shall only be carried out when the electric chain hoist is not loaded and the mains supply is switched off. The power supply must be disconnected. The main switch has to be secured and tag-marked.

| Maintenance Schedule at Normal Operation Duty Cycle | | check | | |
|---|---|---|---|---|
| | | daily | 3 month | yearly |
| visual check of the whole equipment | | • | | |
| function check | of the brake<br>of the lift limiter | •<br> | <br>• | |
| check the brake gap | | | | • |
| maintenance or adjustment of the clutch | | | | • |
| wear of the load chain and chain guide | | | • | |
| lubrication of the load chain | | | • | |
| wear of the rubber elements (visual check) and load limiters | | • | | |
| lubrication of single and double fall hooks, thrust bearings, check condition of the pin which prevents the hook nut from loosening and chisel punch marks | | | | • |
| check condition of safety latch | | • | | |
| universal check of | all screws<br>hold down, chain guide, chain fall<br>safety devices | | | •<br>•<br>• |
| check of the condition and safe positioning of the chain container | | | • | |
| check of the electric cable, power cable and pendant control | | | | • |
| check of the trolleys and wheels | | | | • |

**Table 7:** Maintenance schedule.

**WARNING!** If the hoist is working under very harsh operating conditions (multi-shift operation, high percentage of work with normal load, high number of switching, high temperature environment or poor environmental conditions) inspection intervals have to be halved at least.

**WARNING!** The electric chain hoist must be overhauled after it has reached its safe working period (S.W.P.) or latest after 10 years if no maintenance records are available. Correct recording of the full load operating hours is the sole responsibility of the owner.

## 6.2 Load and Suspension Hooks

- Check condition of the hook (wear marks and center punch spacing).
- Check plastic cover of bottom hooks for chain 4x12 mm and 5.2x15 mm. Change if worn.
- Check function of safety latch.
- Check hook nut and securing pin.
- Check axial bearing and re-grease if necessary.
- Replace rubber buffer if worn.

Load hooks have to be replaced if the length between the chisel punch marks (Y dimension) widened more than 10%. The permissible values are shown on the hook certificate.

## Bottom Hook - Single Fall

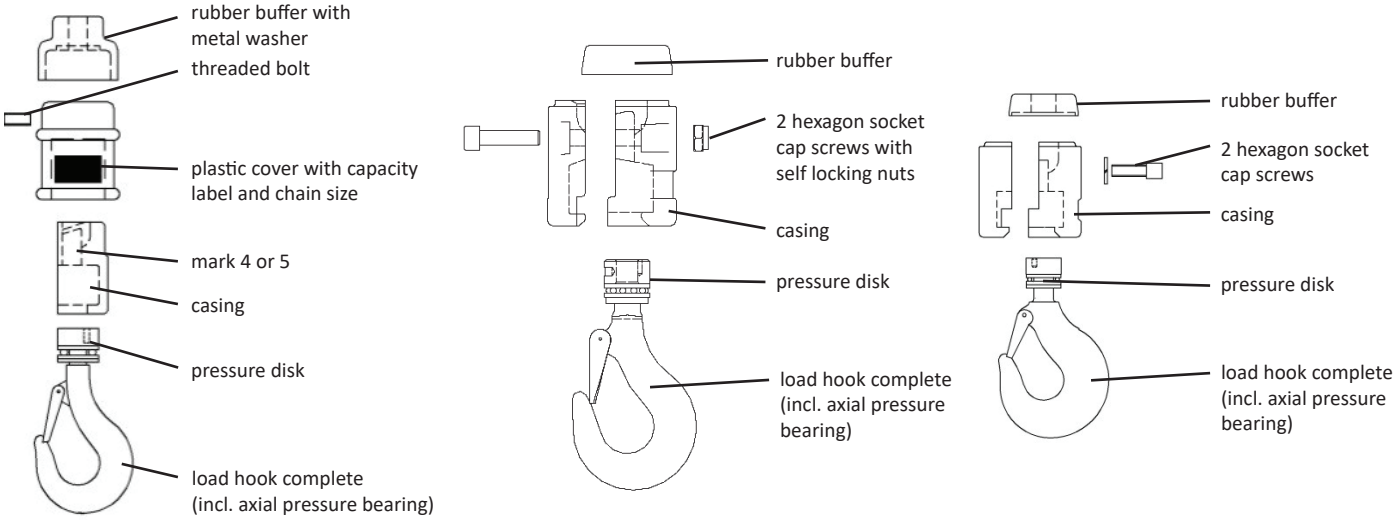


**Figure 40:** Details of the bottom hook - single fall.

For the assembly of the bottom hook, tighten the connection screws with the following torque:

| chain dimension in mm x mm | max. load capacity in tons | dimension of screws (metric dimensions) | quantity of screws | tightening torque in ft./lbs. (Nm) |
|---|---|---|---|---|
| 4x12 | 0.25 | - | - | - |
| 5.2x15 | 0.5 | - | - | - |
| 7.2x21 | 1.25 | M10x40 DIN 912 | 2 | 25 (35) |
| 9x27 | 1.6 | M12x30 DIN 912 | 2 | 37 (50) |
| 11.3x31 | 3.2 | M12x35 DIN 912 | 2 | 37 (50) |

**Table 8:** Connection screws with torques for bottom hook - single fall.

## Bottom Hook - Double Fall

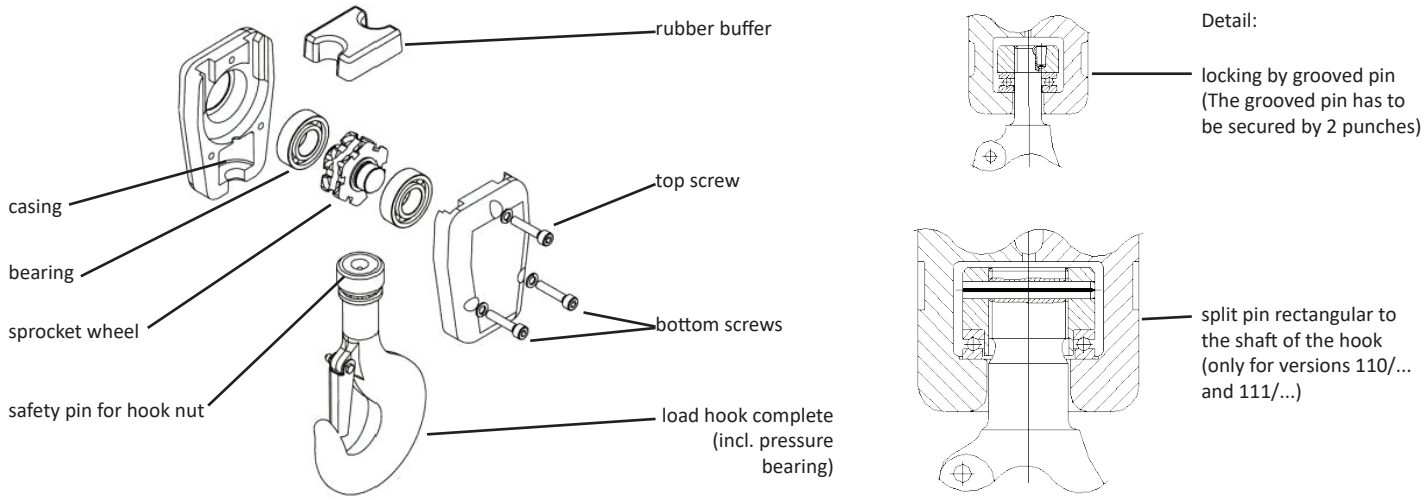


**Figure 41:** Details of the bottom hook - double fall.

For the assembly of the bottom hook, tighten the connection screws with the following torque:

| chain dimension in mm x mm | max. load capacity in tons | dimension of screws (metric dimensions) | quantity of screws | | tightening torque in ft./lbs. (Nm) | |
|---|---|---|---|---|---|---|
| | | | top screw | bottom screws | top screw | bottom screws |
| 4x12 | 0.5 | M6x40 DIN 912 | 2 | 1 | 7.5 (10) | 4.5 (6) |
| 5.2x15 | 1.0 | M6x40 DIN 912 | 2 | 1 | 7.5 (10) | 4.5 (6) |
| 7.2x21 | 2.0 / 2.5 | M8x50 DIN 912 | 3 | | 15 (20) | |
| 9x27 | 3.2 | M10x50 DIN 912 | 3 | | 25 (35) | |
| 11.3x31 | 6.3 | M12x60 DIN 912 | 3 | | 25 (35) | |

***The tightening torque of the screw near the rubber buffer is reduced. This one screw has to be inserted into the threaded bore hole with LOCTITE® or equivalent medium-strong screw locking paste.**

**Table 9:** Connection screws with torques for bottom hooks - double fall.

### Single Hole Suspension Eye

**CAUTION!** When changing from single fall to double fall, reverse the direction of the single hole suspension eye (turn the suspension eye 180 degrees). The hole position must be directly above the load hook.

### Hook Suspension

**CAUTION!** When changing from single fall to double fall, reverse the direction of the hook suspension (turn the hook suspension 180 degrees). The hook should be positioned directly above the load hook. The relevant label on the suspension hook must be on the chain container side.

## 6.3 Load Chain, Chain Guide and Hold Down

**CAUTION!** The chain guide and hold down must be replaced if a new chain will be assembled. For chain, chain guide and hold down, use original spare parts only. Obtain spare parts from manufacturer or from manufacturer's approved service agents only. Use of other non-authorized spare parts may cause serious accidents.

The chain must be replaced:

- if the nominal thickness at the points of contact is reduced by 10%.
- if the chain or a link is elongated by 5%, or an eleven links piece of chain is elongated by 2%.
- if the links do not move properly at their contact points due to wear in the contact area.

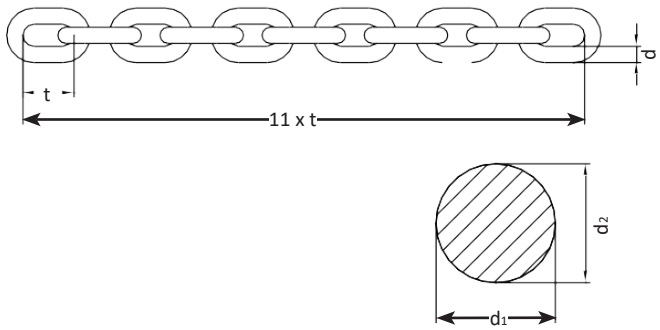


$t$ = nominal length of one chain link
$d$ = nominal diameter of chain link
$d_1$, $d_2$ = actual diameters

$$d_m = \frac{d_1 + d_2}{2}$$

**Figure 42:** Load chain dimensions.

| Chain dimensions | mm x mm | 4 x 12 | | 5 x 15 | | 7.2 x 21 | | 9 x 27 | | 11.3 x 31 | |
|---|---|---|---|---|---|---|---|---|---|---|---|
| | | inch | mm | inch | mm | inch | mm | inch | mm | inch | mm |
| Nominal diameter of link | d | 0.16 | 4 | 0.20 | 5 | 0.28 | 7.2 | 0.35 | 9 | 0.44 | 11.3 |
| Wear limit of diameter | $d_m$ | 0.14 | 3.6 | 0.18 | 4.7 | 0.26 | 6.5 | 0.32 | 8.1 | 0.40 | 10.2 |
| Length over 1 link | t | 0.47 | 12 | 0.59 | 15 | 0.83 | 21 | 1.06 | 27 | 1.22 | 31 |
| Wear limit of 1 link | $t_{max}$ | 0.50 | 12.6 | 0.62 | 15.8 | 0.87 | 22.1 | 1.12 | 28.4 | 1.28 | 32.6 |
| Length over 11 links | 11 x t | 5.20 | 132 | 6.50 | 165 | 9.09 | 231 | 11.69 | 297 | 13.42 | 341 |
| Wear limit of 11 links | $(11 \times t)_{max}$ | 5.30 | 134.6 | 6.63 | 168.3 | 9.28 | 235.6 | 11.92 | 302.9 | 13.69 | 347.8 |

**Table 10:** Wear of load chain.

**WARNING!** The continuous monitoring of the load chain is compulsory. The load chain must be tested before starting operation and after approximately 100 operating hours or 5,000 load cycles under normal conditions and more often under harsh and severe conditions.

- Test/check the full length of chain.
- Test/check especially uppermost and lowest chain position.
- Check for wear, cracks, deformation and other damages.

**Replacing the Load Chain and the Hold Down**

The chain guide and the hold down have to be changed when the load chain is being replaced.

1. Let worn chain move out.
2. Loosen screws (1).
3. Take out chain guide (2).
4. Turn the hold down (3) out.
5. Put a new hold down in by turning it through the groove over the sprocket wheel.
6. Push chain guide in and tighten the screws.
7. Fit new chain as described in the preceding section.

**Figure 43:** Removal of the chain guide.

**Figure 44:** Removal of the hold down.

**CAUTION!** The screws for chain guides of the chain dimensions 9 mm x 27 mm and 11.3 mm x 31 mm have to be screwed in by using threadlocking paste during assembly/reassembly. All components must be free of oil or grease to achieve optimal strength. The recommended threadlocking pastes are Loctite® 243 or equivalent.

**Assembly of the Load Chain in Single Fall Version**

Before starting the insertion of the load chain, it is recommended to reduce the clutch torque, so that the chain is not pulled with full force. Herewith damage to the chain guide can be prevented. After the new chain is assembled, set the clutch to the original value. Observe dimension noted on the brake coil.

1. Push the pull-in wire (special tool) into and through the chain guide cross plate shown until the wire hook is pushed out the opposite side

**Figure 45:** Pull-in wire.

2. Start as shown in the figure above. When feeding the chain into the hoist, ensure that the first link is aligned. Pull the wire so that the first link slides into the chain guide. Then operate the hoist in inching mode, lifting direction until the flat link slides in the picket of the sprocket wheel.
3. Move the chain in by inching the pendant, lowering direction.

**Figure 46:** Assembly of load chain.

**CAUTION!** If the hoist is delivered with a pre-assembled piece of chain, the load chain can be inserted by means of a slotted chain link instead of the pull-in wire.

**Assembly of the Load Hook in Single Fall Version**

Put the spring actuator first on the chain (if it is in the scope of supply).
Put the rubber buffer on the chain and assemble the load hook.

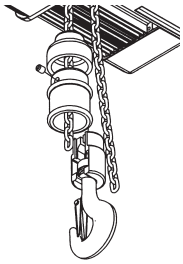

Variant without spring actuator

Variant with spring actuator

**Figure 47:** Assembly of the load hook in single fall version.

**Assembling the Load Chain and Load Hook in Double Fall Version**

1. Insert the load chain into the hoist as described for the single fall version.
2. Pull the chain through the hook block using the pull in wire (special tool). When feeding the chain into the hoist, ensure that the first link is aligned parallel to the ends (hence at right angles to the sides).

**Figure 48:** Assembly of the load chain in double fall version.

**CAUTION!** The chain must not be twisted between the hook block and the hoist body at any of the two chain falls! If the assembly is not possible without a twisted chain, cut one link off to allow correct assembly.

3. Loosen the four screws of the chain guide, taking the chain guide out of the hoist.

**Figure 49:** Completion of double fall version.

4. Pull the U-shaped fork out of the hoist.
5. Pull the chain end from the hook up to the cross chain hole on the under casing side of the casing.
6. Insert the chain into the cross shaped opening. See detail below.
7. Insert the fork to capture this link.

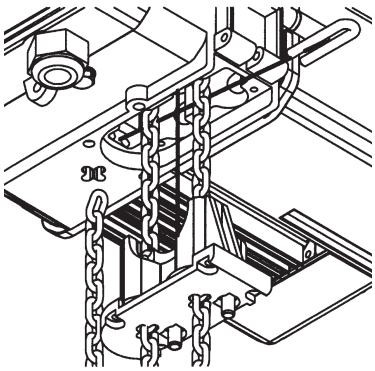

Detail:
Suspension of the second chain fall

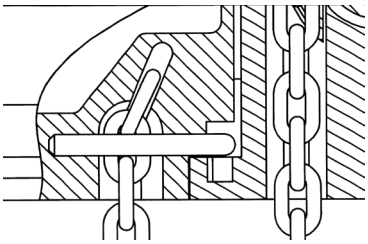

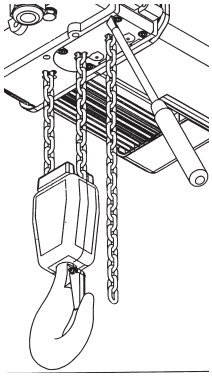

**Figure 50:** Fixation of the second chain fall to the hoist body.

8. Pull hard on the chain to ensure that it is securely fixed.
9. Re-assemble the chain guide.
10. Double check that the chain is not twisted anywhere.
11. Lubricate the entire length of chain.

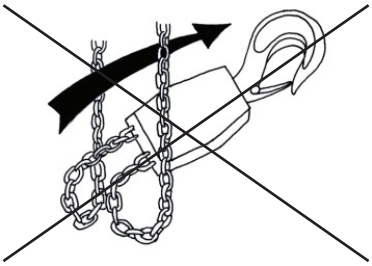

**WARNING!** Do not put the hook block through the two chain falls.

## 6.4 Lift Limiter

**Assembly of the Lift Limiter**

1. Lower the load hook to leave 20 inches (50 cm) of the dead end of the load chain at the dead end side.
2. Put the spring actuator first on the chain (if it is in the scope of supply).
3. Attach the rubber buffer for the lift limiter onto the remaining dead end of chain.
4. Attach the lift limiter onto the 3rd link of the dead end (standard).
5. Attach the lift limiter 20 inches (50 cm) away from the dead end when the chain is fixed to the hoist body (option).

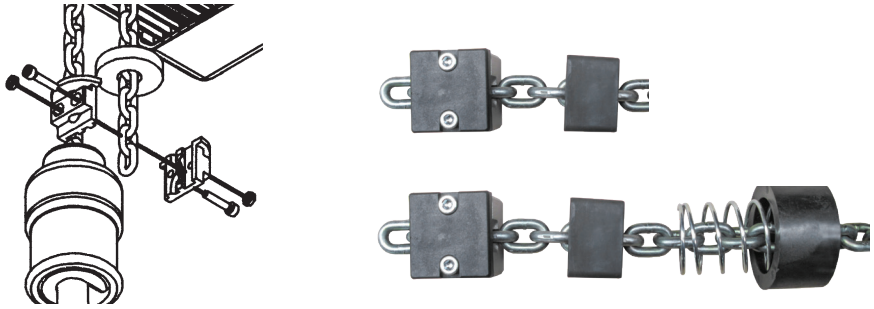


**Figure 51:** Assembly of the lift limiter.

**CAUTION!** The lift limiter is designed to prevent the dead end of chain running out of the hoist. It is used as an emergency stop and cannot be used regularly as an operational lower limit switch.

If the rubber buffer of the lift limiter has a vulcanized metal washer, this washer should be mounted towards the electric chain hoist body.

## 6.5 Chain Container

**Assembly and Filling of the Chain Container**

1. Assemble chain container.
2. Allow the chain to run into the chain container.
3. Lubricate the entire length of the chain.

**WARNING!** Fill chain container only by running the chain through the hoist by using the motor (press 'UP' button). To prevent knobs inside the chain container, do not put a long piece of chain into the chain container directly.

## 6.6 Brake

The brake is maintenance free. To guarantee the correct function of the brake, the air gap has to be checked. The correct nominal air gap is listed below. When the maximum air gap is reached, replace the brake.

**WARNING!** Do not try to dismantle the brake and/or adjust the brake gap.

- Check visually for free movement of the anchor plate.
- Brake coil, anchor plate screws and bushings shall be free of rust/corrosion.
- Check for excessive amount of brake dust and remove dust if necessary.

| brake type | screws acc. to DIN 912 | tightening torque ft.-lbs. (Nm) | coil resistance R20 nominal (Ω) | air gap $S_L$ nominal in (mm) | air gap $S_L$ maximum in (mm) |
|---|---|---|---|---|---|
| BFK 457-06 | 3xM4 | 2.1 (2.8) | 2101 | 0.008 (0.2) | 0.020 (0.5) |
| BFK 457-08 | 3xM5 | 4.1 (5.5) | 1681 | 0.008 (0.2) | 0.020 (0.5) |
| BFK 457-10 | 3xM6 | 7.0 (9.5) | 1273 | 0.008 (0.2) | 0.028 (0.7) |
| BFK 457-12 | 3xM6 | 7.0 (9.5) | 1051 | 0.012 (0.3) | 0.031 (0.8) |

**Table 11:** Data of the motor brake.

### Check of Air Gap of Hoist Brake

**ELECTRICAL SHOCK HAZARD!** Maintenance work shall only be carried out when the electric chain hoist is not loaded and the main switch is switched off. The power supply must be disconnected. The main switch has to be secured and tag-marked.

1. Loosen screws of cap for gear cover.
2. Remove cap for gear cover.
3. Measure air gap between magnet coil and anchor plate with feeler gauge.
4. Compare measured air gap value with maximum air gap value on the table above.
5. If necessary, replace brake.

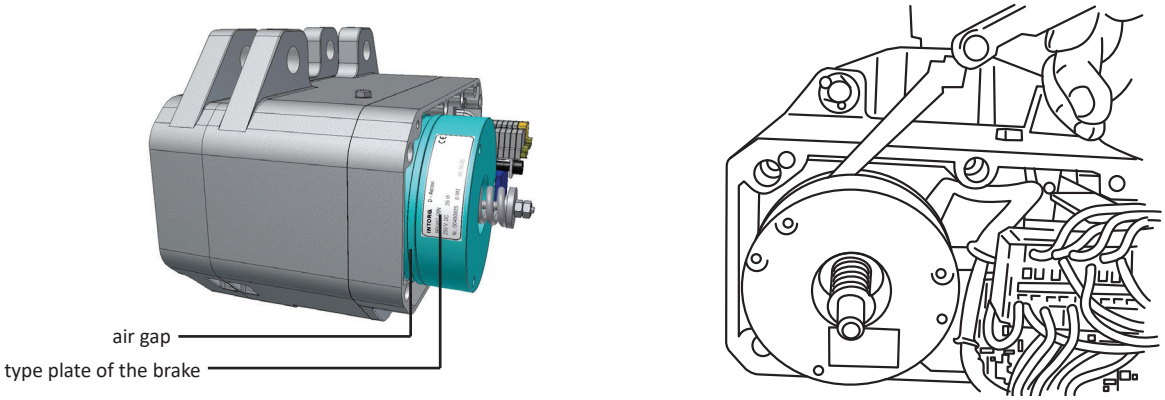


**Figure 52:** Check of air gap.

**Replacement of the Brake**

1. Loosen screws of cap for gear cover.
2. Remove cap for gear cover.
3. Disconnect brake cables.

**WARNING!** Brake replacement is to be done with no load on the hoist.

4. Loosen the three fastening screws of the brake unit.
5. Remove worn out brake unit.
6. Fit new brake unit onto the motor shaft.
7. Fit the brake unit using the three cylindrical screws which are scope of supply of the replacement unit.
8. Tighten the screws with tightening torque according to table 'Data of motor brake'.
9. Connect brake cables according to wiring diagram.
10. Replace cap for gear cover.

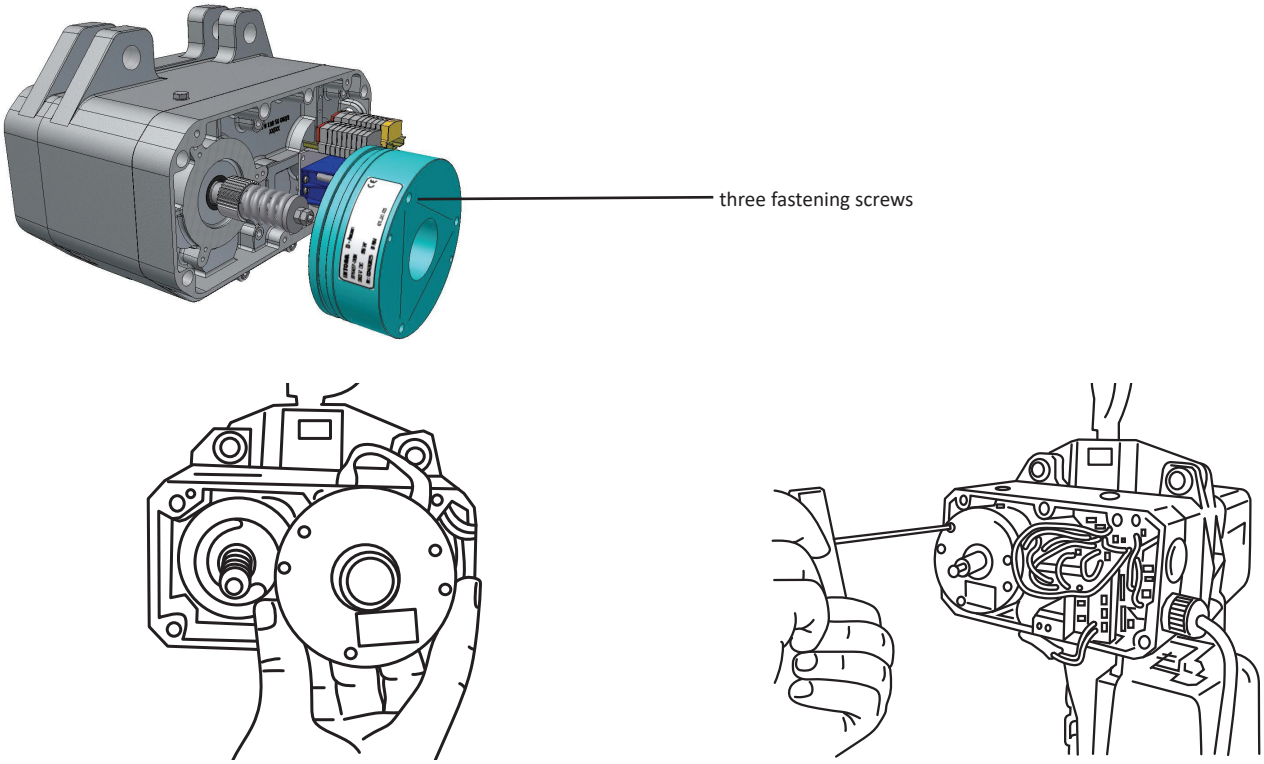


**Figure 53:** Assembly of brake.

**WARNING!** The brake friction lining must not come into contact with any lubricant oil, grease or similar. Oily brakes may lead to serious accidents. Replace oily or greased brakes.

## 6.7 Motor

The lifting motor (1) is a modular assembly. The cooling fan is mounted on the shaft on the B-side under the fan cap. The clutch hub (4) with a coupling (5) is mounted with a key and retaining ring onto the A-side (drive side) of the motor. The motor flange (8) has a center ring and four holes for fixing it to the hoist body. The motor cables (9) are leaving the motor at the motor flange A-side.

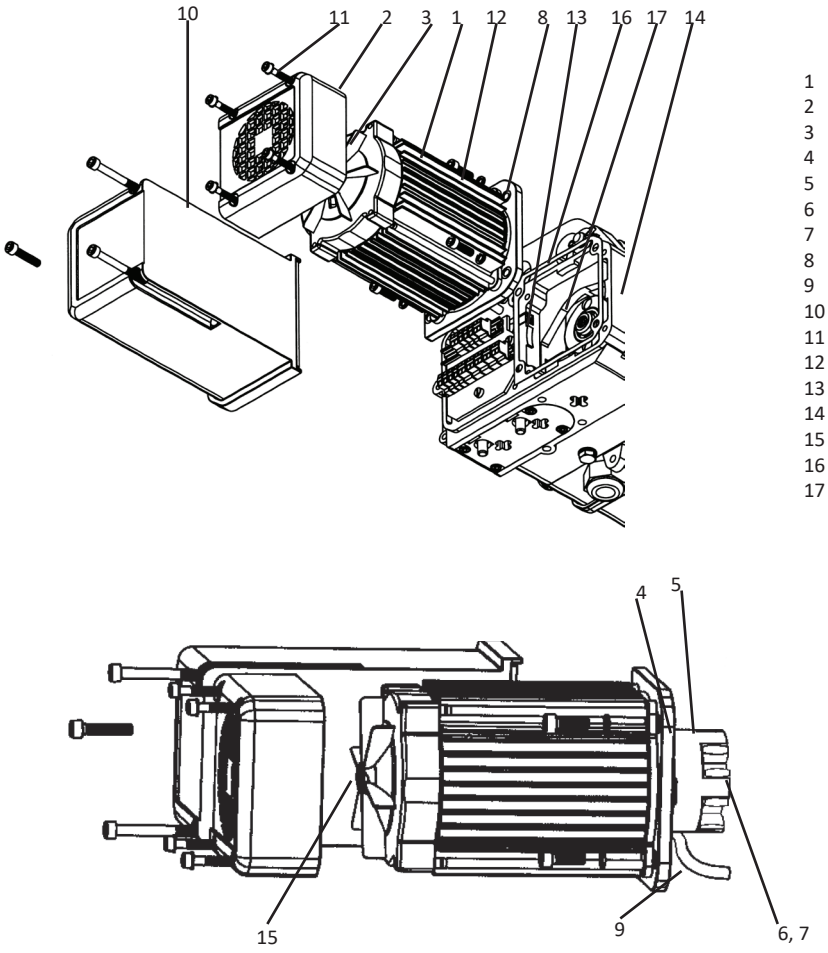


1 lifting motor
2 cap of fan
3 fan
4 clutch hub
5 coupling teeth
6 feather key
7 retaining ring
8 motor flange
9 motor wires
10 control cover
11 screws for fan cap
12 screws for motor flange
13 rubber seal
14 gear housing
15 motor shaft
16 sealing paste
17 clutch drive disc

**Figure 52:** Dismantling and assembly of the lifting motor.

**Dismantling the Lifting Motor**

1. Loosen the screws of the control cover (10) and remove cover.
2. Loosen the screws (11) of the fan cover (2) and remove cover.
3. Disconnect the motor wires using the wiring diagram.
4. Loosen the screws of the motor flange (12) and remove the motor from the hoist body. Do not damage the motor wires (9). Do not lose the rubber seal (13) for the motor cables.

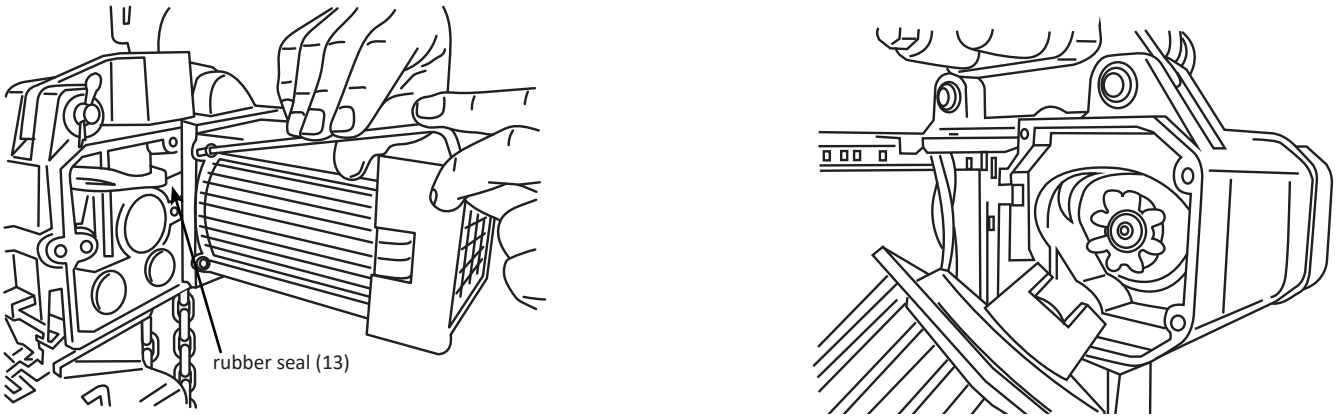


**Figure 55:** Dismantling the motor.

**Assembling the Lifting Motor**

1. Press coupling hub teeth onto the motor shaft until the shaft collar is reached. Take care that the feather key (6) is tightly connected between shaft (15) and hub (4).
2. Secure the clutch hub with a retaining ring (7) onto the shaft.
3. Pour sealing paste (16) on the motor flange (8). Remove excessive amount.
4. Put the lifting motor on the gear casing (14). The motor cables must be placed in the provided gap in the gear casing and sealed with a rubber seal (13). Prevent the cables from damage or pinching. When attaching motor to the clutch hub (4), it may be necessary to rotate the motor shaft on the fan gently until the teeth of the hub will engage with the plastic teethed star.
5. Tighten the screws of the motor flange using spring washers.
6. Connect the motor wires using the wiring diagram. Check that the wires are not pinched or obstructed and that they are well sealed where they protrude through the hoist body casing.

**CAUTION!** Check for the right function of the hoist. The hoist must lift when the 'UP' button is pressed. If the direction shown on the buttons is reversed, change the positions of motor wires L1 and L2.

**WARNING!** Using a hoist with reversed directions leads to malfunction of the limit switches and may cause serious accidents.

**Electric Limit Switches**

- Check the plastic pins in the chain guide visually. If the plastic pins are damaged, broken or pinched, they must be replaced.
- Check function of limit switches. If the function is not correct, check the wiring of the limit switches according to wiring diagram.

## 6.8 Safety Clutch

**CAUTION!** The sliding clutch is located between the lifting motor and main pinion shaft and transmits the torque. The clutch limits the transmission of torque depending on the setting and prevents overloading of the hoist unit and/or suspension points.

The safety clutch acts as an emergency stop in case the hook or end stop runs accidentally against the hoist body in top/bottom position. The clutch has been designed to act as an emergency limit and must not be used during regular operation of the hoist.

The patented safety clutch is situated right after the motor shaft, before the brake. In case of heavy wear at the clutch lining, an uncontrolled lowering of the load is prevented if the brake has been engaged.

**WARNING!** To stop the load in case of worn out clutch lining, take fingers off the 'UP'/'DOWN' buttons and the load will be stopped immediately.

The clutch is easily adjustable and accessible. The wear resistant lining material does not require readjustment if the instructions of this manual are followed comprehensively and the hoist is not overloaded.

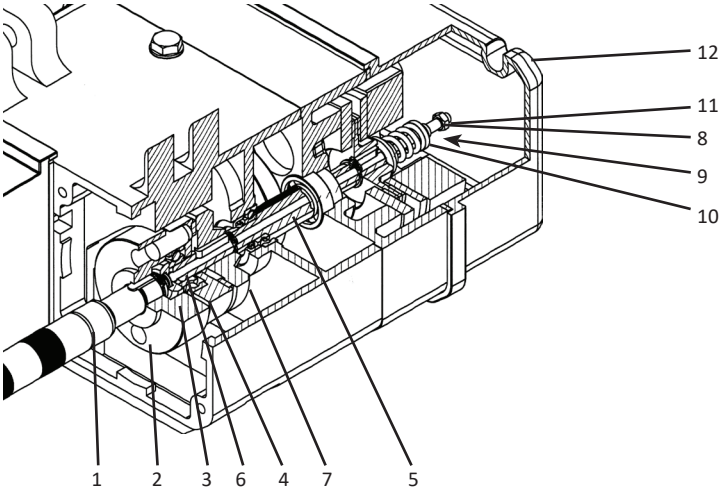


| | |
|---|---|
| 1 | main motor shaft |
| 2 | clutch hub |
| 3 | teeth ring |
| 4 | drive disc with clutch liner |
| 5 | motor pinion shaft |
| 6 | bearing |
| 7 | clutch disk |
| 8 | tension rod |
| 9 | adjusting nut |
| 10 | pressure spring with plate |
| 11 | self locking nut |
| 12 | cap for gear cover |

**Figure 56:** Construction of the sliding clutch.

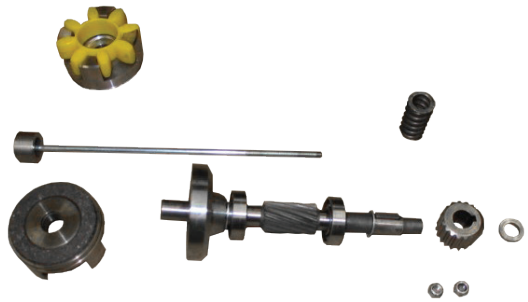

Sliding clutch parts - dismantled

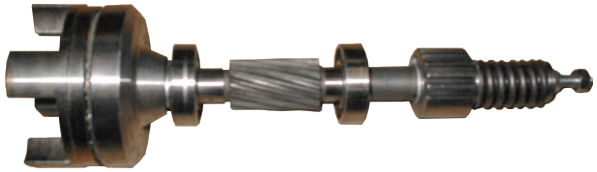

Sliding clutch - assembled

**Figure 57:** Sliding clutch.

**Adjustment of the Sliding Clutch**

**CAUTION!** Adjusting the sliding clutch shall only be carried out by a trained specialist and/or competent person.

1. Apply the test load = 1.25 times the nominal/rated load onto the loadhook.
2. Switch on the chain hoist and check that the test load can be lifted.
3. Lower the test load to the floor.
4. Decrease or increase clutch torque until the test load is just lifted.
5. Adjusting the clutch torque as follows:
   - Loosen and remove the cap for gear cover (12).
   - Use a spanner to hold the retaining self-locking nut (11).
   - Use a second spanner to loosen/tighten the adjusting nut (9) until the required test load is just lifted.
     - Press the control buttons and check operation of the hoisting motor.
   - Recheck the clutch torque by lifting the test load.
6. Record clutch setting in the inspection and test logbook.
7. Tag the clutch setting.

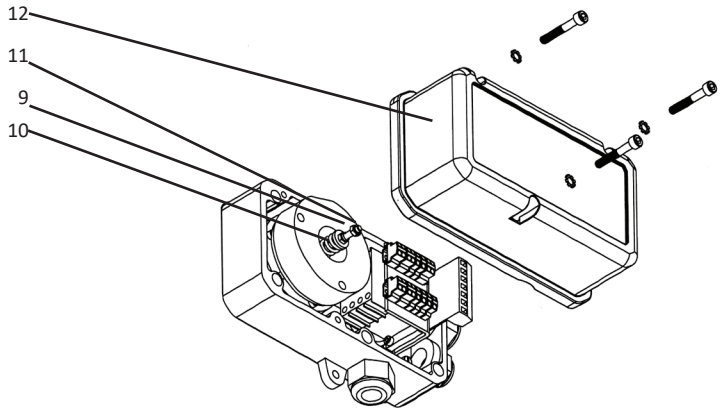


**Figure 58:** Adjustment of the sliding clutch.

**CAUTION!** The sliding clutch is set with the test load by the manufacturer. After changing or replacing the lift motor, it is not necessary to reset the clutch. A test with nominal load is required.

The original distance between the end of the tension rod and the pressure plate of the coupling is marked on a tag on the brake coil.

**Checking the Release Limit of the Sliding Clutch During Regular Inspections**

The release limit of the sliding clutch has to be checked by a trained specialist once a year. Check if the hoist lifts the nominal load. The hoist must not lift more than 1.6 x the nominal load.

If test loads larger than the nominal load are not available, the release limit of sliding clutch can be checked by a clutch testing device. Use such equipment strictly according to its manual.

**CAUTION!** The test of the release limit with a clutch testing device shall not replace the load test with the nominal load.

## 6.9 Lubrication

### Lubrication of Load Chain

**CAUTION!** The links along the entire length of the load chain must be lubricated with penetrating gear lubricant oil before starting operation for the first time and during operation.

- To get lubricant into the links, lubricate the chain with no load. Lubricate the shaded areas of the link.
- Lubricate the chain in the chain box.
- Clean chain before repeated lubrication.
- Amount of lubricant and frequency of lubrication may vary due to operating conditions.
- Lubricate chain every 3 months at a minimum.
- Shorten lubrication intervals if necessary.
- Use a dry-film lubricant, e.g. lubricating varnish. Graphite powder, should be used when ambient influences are conducive to wear (sand, emery).

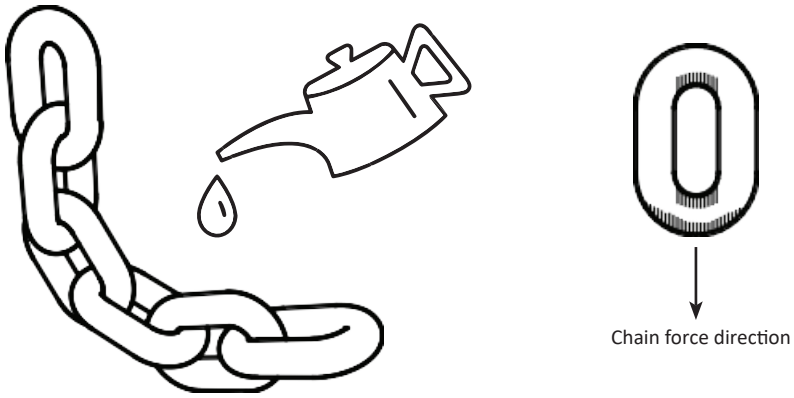


**Figure 59:** Lubrication of chain.

The following lubricants are recommended for lubrication of chain depending on operating conditions:

| Supplier | Lubricant designation |
|---|---|
| Mobil | Mobilux 150 |
| Mobil | Mobilux EP #0 |
| or equivalent lubricant | |

**Table 12:** Alternative lubricant for chain.

### Lubrication of Gear

The gear is already filled with oil by the manufacturer. It is a lifetime lubrication. The oil must be changed if the gear box has to be opened.

In case of visible leakages of the gear vent, find the reason for the leaks and change the oil to be sure that the correct amount of oil is in the gear box.

**CAUTION!** The waste oil has to be disposed of in accordance with environmental protection laws.

Gear oil amounts:

| Hoist Type from Type Plate | Amount in gal (ml) |
|---|---|
| 020 to 031 | 0.046 (175) |
| 050 to 071 | 0.092 (350) |
| 090 to 111 | 0.139 (525) |

**Table 13:** Amount of oil

Acceptable oil types:

| Supplier | Oil designation |
|---|---|
| Fuchs | Renolin CLP 220 |
| Castrol | Alpha Zn 200 |
| ESSO | EP 220 |
| Mobil | Mobil gear 630 |
| Shell | Omala 220 |
| ELF | Reducteif SP 220 |
| BP | XP 220 BP Energol GR |

**Table 14:** Alternative oils

**Lubrication of Load Hook Bearing and Chain Sprocket**

**CAUTION!** Lubricate the anti-friction bearings on the hook and the chain sprocket after approximately 20,000 lifting cycles or once a year. If in heavy use, shorten the interval and use a special anti-friction bearing grease.

Lubricant recommended for lubrication of bearings:

| Supplier | Lubricant designation |
|---|---|
| Mobil | Mobilux 150 |
| Mobil | Mobilux EP #0 |
| or equivalent lubricant | |

**Table 15:** Alternative lubricant for bearings

**Lubrication of Trolleys**

**CAUTION!** The geared wheels and the roller bearings of the electric trolley have to be lubricated with grease once a year or after 10,000 driving cycles. If in heavy use, the interval has to be shortened.

Lubricant recommended for lubrication of trolley bearings:

| Supplier | Lubricant designation |
|---|---|
| Mobil | Mobilux 150 |
| Mobil | Mobilux EP #0 |
| or equivalent lubricant | |

**Table 16:** Alternative lubricant for trolley bearings

# SECTION 7 - TROUBLESHOOTING

**WARNING!** Only trained and competent personnel should inspect and repair this equipment.

**ELECTRICAL SHOCK HAZARD!** Hazardous voltages are present in the electric chain hoist and in connections between components. Work at connected electrical circuits may cause death or serious injury.

Before performing any maintenance work on the equipment, switch off and de-energize the supply of electricity to the equipment. Lock and tag the supply device in the 'OFF' position. Refer to ANSI Z244.1 Personnel Protection-Lockout/Tag-out of Energy Sources.

| Symptom | Cause | Remedy |
|---|---|---|
| Hoist will not operate | Loss of power | Check circuit breakers, switches, fuses and connections on all three phases of the power lines/cables. |
| | Wrong voltage or frequency | Check voltage and frequency of power supply against the rating on the nameplate of the motor. |
| | Hoist overloaded | Reduce load to within rated capacity of hoist. |
| | Motor overheated and thermal overload protector has tripped. | See Troubleshooting Problem "Motor or brake overheating". |
| | Improper, loose, or broken wire in hoist electrical system | Shut off power supply, check wiring connections on hoist control panel and inside push-button pendant. |
| | Brake does not release | Check brake coil for continuity. Replace brake if needed. |
| | | Check rectifier input and output voltages. Replace rectifier if needed. |
| | Faulty contactor | Check coil for open or short circuit. Check all connections in the control circuit. Check for open contactors. Replace as needed. |
| | Emergency stop depressed on push button control pendant | Turn the emergency stop button clockwise to unlock the controls and allow hoist operation after rectification of possible fault. |
| | Defect in control transformer | Check transformer coil for signs of overheating. Disconnect transformer and check for open winding. |
| | Motor burned out | Replace motor frame/stator, shaft/rotor, and any other damaged parts. |
| Hoist moving in wrong direction | Power supply reversely phased | Exchange 2 of the 3 power supply cord wires at the power source. (Refer to Section for instructions on how to check for correct power supply phase connection.) |
| | Improper electrical connections | Refer to wiring diagram and check all connections. |
| Motor or brake overheating | Wrong voltage or frequency | Check voltage and frequency of power supply against the rating in the nameplate of the motor. |
| | Extreme external heating | At an ambient temperature above 40°C, the frequency of hoist operation must be reduced to avoid overheating of the motor. Special provisions should be made to ventilate the hoist or otherwise shield it from the heat. |

| Symptom | Cause | Remedy |
|---|---|---|
| Hoist lifts but will not lower | DOWN-circuit open | Check circuit for loose connections. Check down side of limit switch for malfunction. |
| | Broken conductor in pendant cord | Check continuity for each conductor in the cable. If one is broken, replace entire cable. |
| | Faulty contactors | Check coils for open or short circuit. Check all connections on motor circuit. Check for burned contacts. Replace as needed. |
| | Faulty switch in pendant | Check electrical continuity. Check electrical connections. Replace or repair as needed. |
| | Chain jammed | Check if chain can move smoothly into the chain container. Check for chain knots and remove if any. Replace chain and chain guide parts if damage is visible. |
| Hoist lowers but will not lift | Hoist overloaded | Reduce load to within rated capacity of hoist. |
| | Undervoltage in hoist's power supply | Determine cause of undervoltage and bring to within plus or minus 10% of the voltage specified on the motor nameplate. The voltage should be measured at the hoist input terminals. |
| | UP-circuit open | Check circuit for loose connections. Check up side of limit switch for malfunction. |
| | Broken conductor in pendant cord | Check the continuity of each conductor in the cable. If one is broken, replace entire cable. |
| | Faulty contactor | Check coils for open or short circuit. Check all connections on motor circuit. Check for burned contacts. Replace as needed. |
| | Faulty friction clutch | Check clutch setting or replace. |
| | Chain jammed | Check if chain can move smoothly into the chain box. Check for chain knots and remove if any. Replace chain and chain guide parts if damage is visible. |
| Hoist will not lift rated load or does not have the proper lifting speed | Hoist overloaded | Reduce load with rated capacity. |
| | Undervoltage in hoist's power supply | Determine cause of undervoltage and bring to within plus or minus 10% of voltage specified on the motor nameplate. The voltage should be measured at the hoist input terminals. |
| | Faulty friction clutch | Check clutch setting or replace. |
| | Chain jammed | Check if chain can move smoothly into the chain container. Check for chain knots and remove if any. Replace chain and chain guide parts if damage is visible. |
| Load drifts excessively when hoist is stopped | Brake not holding | Check brake for proper "brake gap" dimension. Replace if needed. |
| | Excessive load | Reduce load to within rated capacity of hoist. |
| | Excessive duty cycle | Reduce number of cycles |
| Hoist operates intermittently | Contactor contacts arcing | Check for burned contacts. Replace if necessary. |
| | Loose connection in circuit | Check all wires and terminals for bad connections. Replace if necessary. |
| | Broken conductor in control pendant | Check for intermittent continuity in each conductor of the control pendant. Replace entire control pendant if continuity is not constant. |

**Table 17:** Troubleshooting manual

# SECTION 8 - SPARE PARTS

For spare parts, contact the manufacturer or your authorized Gorbel® dealer. If a part cannot be identified, contact Gorbel. Have the serial number of the electric chain hoist ready for correct identification.

**CAUTION!** Only original spare parts must be used. The manufacturer's guarantee is given for those spare parts only. The manufacturer cannot be held responsible for failures and breakdowns caused by use of non-original or incorrect spare parts.

# SECTION 9 - ASSEMBLY AND PROPER DISPOSAL

After the hoist or its components have reached the end of the safe working period (S.W.P.), the hoist or its components must be overhauled or taken out of operation.

**CAUTION!** The parts have to be disposed of in accordance with environmental protection laws. Metals, rubber and plastics and have to be disposed of or recycled separately.

# LIMITED WARRANTY

It is agreed that the equipment purchased hereunder is subject to the following LIMITED warranty and no other. Gorbel Incorporated ("Gorbel") warrants the manual push-pull Work Station Cranes, Jib Crane, and Gantry Crane products to be free from defects in material or workmanship for a period of ten years or 20,000 hours use from date of shipment. Gorbel warrants the Motorized Work Station Cranes, Jib Crane and Gorbel® hoist products to be free from defects in material or workmanship for a period of two years or 4,000 hours use from the date of shipment. Gorbel warrants the G-Force® and Easy Arm™ products to be free from defects in material or workmanship for a period of one year or 2,000 hours use from the date of shipment. This warranty does not cover Gantry Crane wheels. This warranty shall not cover failure or defective operation caused by operation in excess of recommended capacities, misuses, negligence or accident, and alteration or repair not authorized by Gorbel. No system shall be field modified after manufacture without the written authorization of Gorbel, Inc. Any field modification made to the system without the written authorization of Gorbel, Inc. shall void Gorbel's warranty obligation. OTHER THAN AS SET FORTH HEREIN, NO OTHER EXPRESS WARRANTIES, AND NO IMPLIED WARRANTIES, ORAL OR WRITTEN, INCLUDING BUT NOT LIMITED TO THE WARRANTIES OF MERCHANTABILITY OR FITNESS FOR PARTICULAR PURPOSE, ARE MADE BY GORBEL WITH RESPECT TO ITS PRODUCTS AND ALL SUCH WARRANTIES ARE HEREBY SPECIFICALLY DISCLAIMED. GORBEL SHALL NOT BE LIABLE UNDER ANY CIRCUMSTANCES FOR ANY INCIDENTAL, SPECIAL AND/OR CONSEQUENTIAL DAMAGES WHATSOEVER, WHETHER OR NOT FORESEEABLE, INCLUDING BUT NOT LIMITED TO DAMAGES FOR LOST PROFITS AND ALL SUCH INCIDENTAL, SPECIAL AND/OR CONSEQUENTIAL DAMAGES ARE HEREBY ALSO SPECIFICALLY DISCLAIMED. Gorbel's obligation and Purchaser's or end user's sole remedy under this warranty is limited to the replacement or repair of Gorbel's products at the factory, or at the discretion of Gorbel, at a location designated by Gorbel. Purchaser or end user shall be solely responsible for all freight and transportation costs incurred in connection with any warranty work provided by Gorbel hereunder. Gorbel will not be liable for any loss, injury or damage to persons or property, nor for damages of any kind resulting from failure or defective operation of any materials or equipment furnished hereunder. Components and accessories not manufactured by Gorbel are not included in this warranty. Purchaser's or end user's remedy for components and accessories not manufactured by Gorbel is limited to and determined by the terms and conditions of the warranty provided by the respective manufacturers of such components and accessories.

**A) DISCLAIMER OF IMPLIED WARRANTY OF MERCHANTABILITY**

Gorbel and Purchaser agree that any claim made by Purchaser which is inconsistent with Gorbel's obligations and the warranty remedies provided with Gorbel's products, and in particular, special, incidental and consequential damages, are expressly excluded.

**B) DISCLAIMER OF IMPLIED WARRANTY OF FITNESS FOR PARTICULAR PURPOSE**

Gorbel and Purchaser agree that the implied warranty of fitness for particular purpose is excluded from this transaction and shall not apply to the goods involved in this transaction.

**C) DISCLAIMER OF EXPRESS WARRANTY**

Gorbel's agents, or dealer's agents, or distributor's agents may have made oral statements about the machinery and equipment described in this transaction. Such statements do not constitute warranties, and Purchaser agrees not to rely on such statements. Purchaser also agrees that such statements are not part of this transaction.

**D) DISCLAIMER OF SPECIAL, INCIDENTAL AND CONSEQUENTIAL DAMAGES**

Gorbel and Purchaser agree that any claim made by Purchaser which is inconsistent with Gorbel's obligations and the warranty remedies provided with Gorbel's products, and in particular, special, incidental and consequential damages, are expressly excluded.

**E) DEALER OR DISTRIBUTOR NOT AN AGENT**

Gorbel and Purchaser agree that Purchaser has been put on notice that dealer or distributor is not Gorbel's agent in any respect for any reason. Gorbel and Purchaser also agree that Purchaser has been put on notice that dealer or distributor is not authorized to incur any obligations or to make any representations or warranties on Gorbel's behalf other than those specifically set forth in Gorbel's warranty provided in connection with its product.

**F) MERGER**

This warranty agreement constitutes a final and complete written expression of all the terms and conditions of this warranty and is a complete and exclusive statement of those terms.

**G) PAINTING**

Every crane (excluding components) receives a quality paint job before leaving the factory. Unfortunately, no paint will protect against the abuses received during the transportation process via common carrier. We have included at least one (1) twelve ounce spray can for touchup with each crane ordered (unless special paint was specified). If additional paint is required, contact a Gorbel® Customer Service Representative at 1-800-821-0086 or 1-585-924-6262.

**Title and Ownership:**

Title to the machinery and equipment described in the foregoing proposal shall remain with Gorbel and shall not pass to the Purchaser until the full amount herein agreed to be paid has been fully paid in cash.

**Claims and Damages:**

Unless expressly stated in writing, goods and equipment shall be at Purchaser's risk on and after Seller's delivery in good shipping order to the Carrier. Gorbel shall in no event be held responsible for materials furnished or work performed by any person other than it or its authorized representative or agent.

**Cancellations:**

If it becomes necessary for the purchaser to cancel this order wholly or in part, he shall at once so advise Gorbel in writing. Upon receipt of such written notice all work will stop immediately. If the order entails only stock items, a flat restocking charge of 15% of the purchase price will become due and payable by Purchaser to Gorbel. Items purchased specifically for the canceled order shall be charged for in accordance with the cancellation charges of our supplier plus 15% for handling in our factory. The cost of material and/or labor expended in general fabrication for the order shall be charged for on the basis of total costs to Gorbel up to the time of cancellation plus 15%.

**Returns:**

No equipment, materials or parts may be returned to Gorbel without express permission in writing to do so. Extra Charge Delay: If Purchaser delays or interrupts progress of Seller's performance, or causes changes to be made, Purchaser agrees to reimburse Gorbel for expense, if any, incident to such delay.

**Changes and Alterations:**

Gorbel reserves the right to make changes in the details of construction of the equipment, as in its judgment, will be in the interest of the Purchaser; will make any changes in or additions to the equipment which may be agreed upon in writing by the Purchaser; and Gorbel is not obligated to make such changes in products previously sold any customer.

**Third Party Action:**

Should Gorbel have to resort to third party action to collect any amount due after thirty (30) days from date of invoice, the Purchaser agrees to pay collection costs, reasonable attorney's fees, court costs and legal interest.

**OSHA Responsibilities:**

Gorbel agrees to fully cooperate with Purchaser in the design, manufacture or procurement of safety features or devices that comply with OSHA regulations. In the event additional equipment or labor shall be furnished by Gorbel, it will be at prices and standard rates then in effect, or as may be mutually agreed upon at the time of the additional installation.

**Equal Employment Opportunity:**

Gorbel agrees to take affirmative action to ensure equal employment opportunity for all job applicants and employees without regard to race, color, age, religion, sex, national origin, handicap, veteran, or marital status. Gorbel agrees to maintain non-segregated work facilities and comply with rules and regulations of the Secretary of Labor or as otherwise provided by law or Executive Order.

**⚠ WARNING**

This product contains chemicals known to the State of California to cause cancer and birth defects or other reproductive harm.

For more information: www.P65Warnings.ca.gov

GORBEL®
A CLASS ABOVE
600 Fishers Run, P.O. Box 593
Fishers, NY 14453-0593

©2026 Gorbel Inc.
All Rights Reserved

linkedin.com/company/gorbel

Facebook.com/gorbelinc

youtube.com/gorbelmarketing

instagram.com/gorbelinc

gorbel.com/blog